T Union tee

EO 24° cone end

profile body steel and brass (S3)
Series LL4–10 mm D1
Series L 6+ 8 mm D1
Series S 6 mm D1

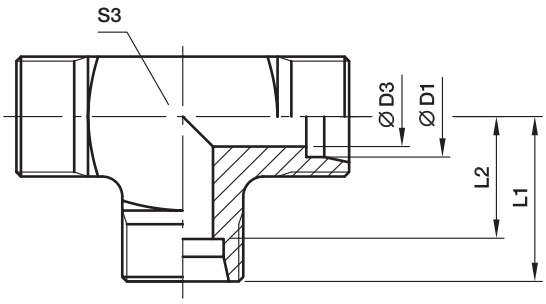

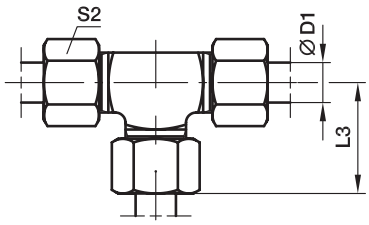

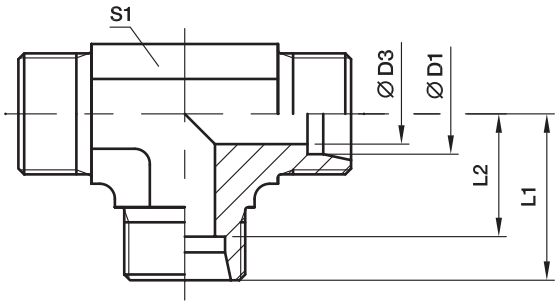

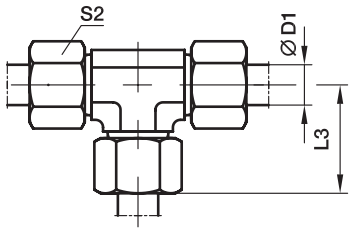

Series	D1	D3	L1	L2	L3	S1	S2	S3	Weight g/1 piece	Order code*	PN (bar)[1] CF	A3C	71	MS
LL[2])	04	3.0	15	11.0	21	9	10	9	19	**T04LL**	100	100	100	63
	06	4.5	15	9.5	21	9	12	11	20	**T06LL**	100	100	100	63
	08	6.0	17	11.5	23	12	14	12	27	**T08LL**	100	100	100	63
	10	8.0	18	12.5	24	12	17	14	39	**T10LL**	100	100	100	63
	12	10.0	21	15.0	27	14	19		45	**T12LL**	100	100	100	63
L[3])	06	4.0	19	12.0	27	12	14	12	37	**T06L**	500	315	315	200
	08	6.0	21	14.0	29	12	17	14	53	**T08L**	500	315	315	200
	10	8.0	22	15.0	30	14	19		48	**T10L**	500	315	315	200
	12	10.0	24	17.0	32	17	22		65	**T12L**	400	315	315	200
	15	12.0	28	21.0	36	19	27		106	**T15L**	400	315	315	200
	18	15.0	31	23.5	40	24	32		179	**T18L**	400	315	315	200
	22	19.0	35	27.5	44	27	36		225	**T22L**	250	160	160	100
	28	24.0	38	30.5	47	36	41		396	**T28L**	250	160	160	100
	35	30.0	45	34.5	56	41	50		567	**T35L**	250	160	160	100
	42	36.0	51	40.0	63	50	60		905	**T42L**	250	160	160	100
S[4])	06	4.0	23	16.0	31	12	17	14	68	**T06S**	800	630	630	400
	08	5.0	24	17.0	32	14	19		70	**T08S**	800	630	630	400
	10	7.0	25	17.5	34	17	22		91	**T10S**	800	630	630	400
	12	8.0	29	21.5	38	17	24		117	**T12S**	630	630	630	400
	14	10.0	30	22.0	40	19	27		136	**T14S**	630	630	630	400
	16	12.0	33	24.5	43	24	30		202	**T16S**	630	400	400	250
	20	16.0	37	26.5	48	27	36		289	**T20S**	420	400	400	250
	25	20.0	42	30.0	54	36	46		545	**T25S**	420	400	400	250
	30	25.0	49	35.5	62	41	50		758	**T30S**	420	400	400	250
	38	32.0	57	41.0	72	50	60		1264	**T38S**	420	315	315	200

[1]) Pressure shown = item deliverable

[2]) LL = very light series; [3]) L = light series; [4]) S = heavy series

$\frac{\text{PN (bar)}}{10}$ = PN (MPa)

Delivery without nut and ring. Information on ordering complete fittings see page I7.

*Please add the **suffixes** below according to the material/surface required.

Order code suffixes		
Material	Suffix surface and material	Example
Steel, zinc plated, chrome[6]-free	CFX	T16SCFX
Steel, zinc yellow plated	A3CX	T16SA3CX
Stainless Steel	71X	T16S71X
Brass	MSX	T16SMSX

TR Tee Reducer

EO 24° cone end

Profile body steel and brass (S1)
Series LL 4–8 mm D1, D2, D3
Series L 6+8 mm D1, D2, D3

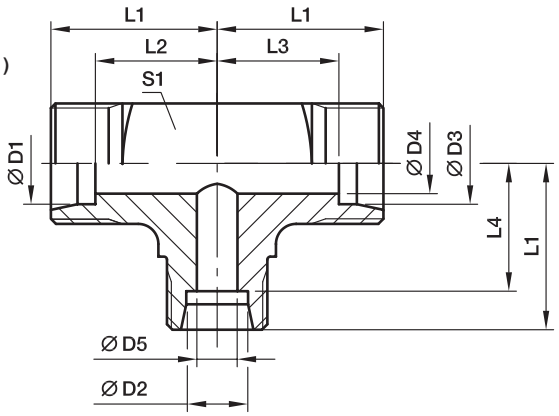

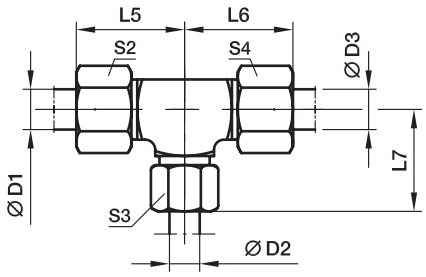

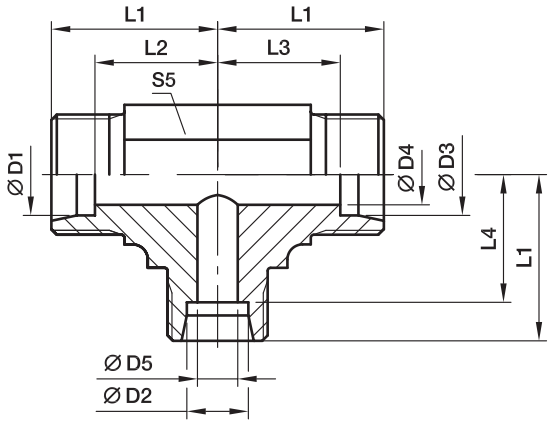

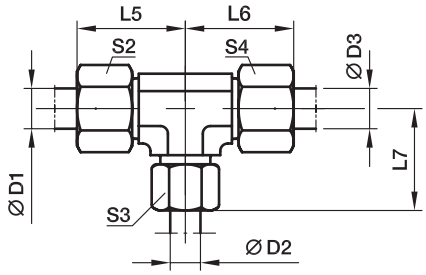

Series	D1	D2	D3	D4	D5	L1	L2	L3	L4	L5	L6	L7	S1	S2	S3	S4	S5	Weight g/1 piece	Order code*	PN (bar)[1] CF	A3C	71	MS
LL[2])	04	08	04	3.0	6	17	13.0	13.0	11.5	23	23	23	12	10	14	10	12	27	**TR04/08/04LL**	100	100	100	63
	06	04	06	4.5	3	15	9.5	9.5	11.0	21	21	21	11	12	10	12	9	18	**TR06/04/06LL**	100	100	100	63
L[3])	06	08	06	4.0	6	21	14.0	14.0	14.0	29	29	29	14	14	17	14	12	54	**TR06/08/06L**	500	315	315	200
	08	06	08	6.0	4	21	14.0	14.0	14.0	29	29	29	14	17	14	17	12	53	**TR08/06/08L**	500	315	315	200
	06	10	06	4.0	8	22	15.0	15.0	15.0	30	30	30		14	19	14	14	53	**TR06/10/06L**	500	315	315	200
	08	10	08	6.0	8	22	15.0	15.0	15.0	30	30	30		17	19	17	14	50	**TR08/10/08L**	500	315	315	200
	10	06	10	8.0	4	22	15.0	15.0	15.0	30	30	30		19	14	19	14	46	**TR10/06/10L**	500	315	315	200
	10	08	10	8.0	6	22	15.0	15.0	15.0	30	30	30		19	17	19	14	43	**TR10/08/10L**	500	315	315	200
	10	10	06	4.0	8	22	15.0	15.0	15.0	30	30	30		19	19	14	14	49	**TR10/10/06L**	500	315	315	200
	08	12	08	6.0	10	24	17.0	17.0	17.0	32	32	32		17	22	17	17	67	**TR08/12/08L**	400	315	315	200
	12	06	12	10.0	4	24	17.0	17.0	17.0	32	32	32		22	14	22	17	66	**TR12/06/12L**	400	315	315	200
	12	08	08	6.0	6	24	17.0	17.0	17.0	32	32	32		22	17	17	17	66	**TR12/08/08L**	400	315	315	200
	12	08	12	10.0	6	24	17.0	17.0	17.0	32	32	32		22	17	22	17	68	**TR12/08/12L**	400	315	315	200
	12	10	10	8.0	8	24	17.0	17.0	17.0	32	32	32		22	19	19	17	67	**TR12/10/10L**	400	315	315	200
	12	10	12	10.0	8	24	17.0	17.0	17.0	32	32	32		22	19	22	17	67	**TR12/10/12L**	400	315	315	200
	12	12	10	8.0	10	24	17.0	17.0	17.0	32	32	32		22	22	19	17	64	**TR12/12/10L**	400	315	315	200
	10	15	10	8.0	12	28	21.0	21.0	21.0	36	36	36		19	27	19	19	105	**TR10/15/10L**	400	315	315	200
	12	15	12	10.0	12	28	21.0	21.0	21.0	36	36	36		22	27	22	19	102	**TR12/15/12L**	400	315	315	200
	15	06	15	12.0	4	28	21.0	21.0	21.0	36	36	36		27	14	27	19	107	**TR15/06/15L**	400	315	315	200
	15	10	15	12.0	8	28	21.0	21.0	21.0	36	36	36		27	19	27	19	105	**TR15/10/15L**	400	315	315	200
	15	12	12	10.0	10	28	21.0	21.0	21.0	36	36	36		27	22	22	19	101	**TR15/12/12L**	400	315	315	200
	15	12	15	12.0	10	28	21.0	21.0	21.0	36	36	36		27	22	27	19	105	**TR15/12/15L**	400	315	315	200
	15	15	12	10.0	12	28	21.0	21.0	21.0	36	36	36		27	27	22	19	103	**TR15/15/12L**	400	315	315	200
	12	18	12	10.0	15	31	24.0	24.0	23.5	39	39	40		22	32	22	24	177	**TR12/18/12L**	400	315	315	200
	18	10	10	8.0	8	31	23.5	24.0	24.0	40	39	39		32	19	19	24	173	**TR18/10/10L**	400	315	315	200
	18	10	18	15.0	8	31	23.5	23.5	24.0	40	40	39		32	19	32	24	182	**TR18/10/18L**	400	315	315	200
	18	12	18	15.0	10	31	23.5	23.5	24.0	40	40	39		32	22	32	24	174	**TR18/12/18L**	400	315	315	200

ET Swivel nut branch tee

EO 24° cone end / EO 24° DKO swivel

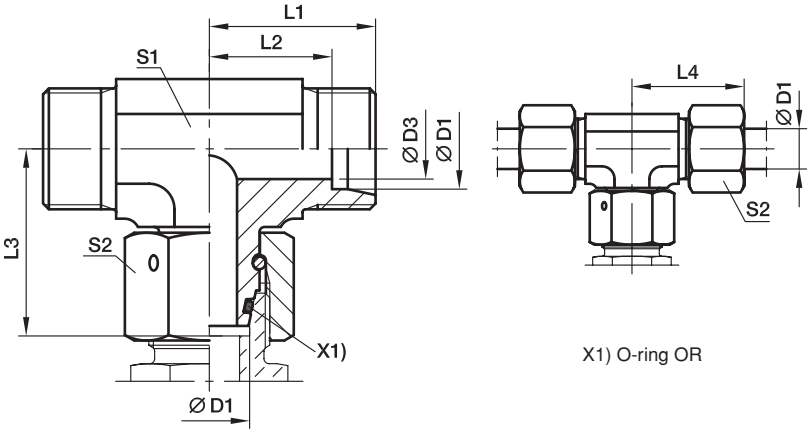

X1) O-ring OR

Series	D1	D3	L1	L2	L3	L4	S1	S2	Weight g/1 piece	Order code*	PN (bar)[1] CF	A3C	71
L[3])	06	4	19	12.0	26.0	27	12	14	42	**ET06LOMD**	500	315	315
	08	6	21	14.0	27.5	29	12	17	53	**ET08LOMD**	500	315	315
	10	8	22	15.0	29.0	30	14	19	71	**ET10LOMD**	500	315	315
	12	10	24	17.0	29.5	32	17	22	97	**ET12LOMD**	400	315	315
	15	12	28	21.0	32.5	36	19	27	159	**ET15LOMD**	400	315	315
	18	15	31	23.5	35.5	40	24	32	239	**ET18LOMD**	400	315	315
	22	19	35	27.5	38.5	44	27	36	308	**ET22LOMD**	250	160	160
	28	24	38	30.5	41.5	47	36	41	449	**ET28LOMD**	250	160	160
	35	30	45	34.5	51.0	56	41	50	679	**ET35LOMD**	250	160	160
	42	36	51	40.0	56.0	63	50	60	1131	**ET42LOMD**	250	160	160
S[4])	06	4	23	16.0	27.0	31	12	17	63	**ET06SOMD**	800	630	630
	08	5	24	17.0	27.5	32	14	19	79	**ET08SOMD**	800	630	630
	10	6	25	17.5	30.0	34	17	22	113	**ET10SOMD**	800	630	630
	12	8	29	21.5	31.0	38	17	24	136	**ET12SOMD**	630	630	630
	14	9	30	22.0	35.0	40	19	27	173	**ET14SOMD**	630	630	630
	16	12	33	24.5	36.5	43	24	30	239	**ET16SOMD**	630	400	400
	20	16	37	26.5	44.5	48	27	36	388	**ET20SOMD**	420	400	400
	25	20	42	30.0	50.0	54	36	46	652	**ET25SOMD**	420	400	400
	30	25	49	35.5	55.0	62	41	50	905	**ET30SOMD**	420	400	400
	38	32	57	41.0	63.0	72	50	60	1462	**ET38SOMD**	420	315	315

[1]) Pressure shown = item deliverable

[3]) L = light series; [4]) S = heavy series

$\frac{\text{PN (bar)}}{10}$ = PN (MPa)

Delivery without nut and ring. Information on ordering complete fittings or alternative sealing materials see page I7.

*Please add the **suffixes** below according to the material/surface required.

Order code suffixes			
Material	Suffix surface and material	Example	Standard sealing material (no additonal. suffix needed)
Steel, zinc plated, chrome[6]-free	CF	ET16SOMDCF	NBR
Steel, zinc yellow plated	A3C	ET16SOMDA3C	NBR
Stainless Steel	71	ET16SOMD71	VIT

EL Swivel nut run tee

EO 24° cone end / EO 24° DKO swivel

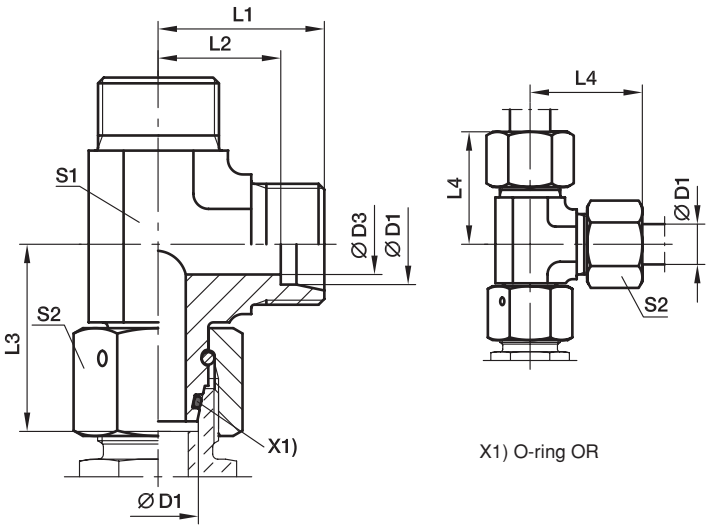

X1) O-ring OR

Series	D1	D3	L1	L2	L3	L4	S1	S2	Weight g/1 piece	Order code*	PN (bar)[1] CF	A3C	71
L[3])	06	4	19	12.0	26.0	27	12	14	44	**EL06LOMD**	500	315	315
	08	6	21	14.0	27.5	29	12	17	53	**EL08LOMD**	500	315	315
	10	8	22	15.0	29.0	30	14	19	68	**EL10LOMD**	500	315	315
	12	10	24	17.0	29.5	32	17	22	95	**EL12LOMD**	400	315	315
	15	12	28	21.0	32.5	36	19	27	151	**EL15LOMD**	400	315	315
	18	15	31	23.5	35.5	40	24	32	233	**EL18LOMD**	400	315	315
	22	19	35	27.5	38.5	44	27	36	309	**EL22LOMD**	250	160	160
	28	24	38	30.5	41.5	47	36	41	436	**EL28LOMD**	250	160	160
	35	30	45	34.5	51.0	56	41	50	666	**EL35LOMD**	250	160	160
	42	36	51	40.0	56.0	63	50	60	1163	**EL42LOMD**	250	160	160
S[4])	06	4	23	16.0	27.0	31	12	17	65	**EL06SOMD**	800	630	630
	08	5	24	17.0	27.5	32	14	19	84	**EL08SOMD**	800	630	630
	10	6	25	17.5	30.0	34	17	22	118	**EL10SOMD**	800	630	630
	12	8	29	21.5	31.0	38	17	24	136	**EL12SOMD**	630	630	630
	14	9	30	22.0	35.0	40	19	27	173	**EL14SOMD**	630	630	630
	16	12	33	24.5	36.5	43	24	30	260	**EL16SOMD**	630	400	400
	20	16	37	26.5	44.5	48	27	36	375	**EL20SOMD**	420	400	400
	25	20	42	30.0	50.0	54	36	46	655	**EL25SOMD**	420	400	400
	30	25	49	35.5	55.0	62	41	50	906	**EL30SOMD**	420	400	400
	38	32	57	41.0	63.0	72	50	60	1472	**EL38SOMD**	420	315	315

[1]) Pressure shown = item deliverable

[3]) L = light series; [4]) S = heavy series

$$\frac{\text{PN (bar)}}{10} = \text{PN (MPa)}$$

Delivery without nut and ring. Information on ordering complete fittings or alternative sealing materials see page I7.

Order code suffixes			
Material	Suffix surface and material	Example	Standard sealing material (no additonal. suffix needed)
Steel, zinc plated, chrome[6]-free	CF	EL16SOMDCF	NBR
Steel, zinc yellow plated	A3C	EL16SOMDA3C	NBR
Stainless Steel	71	EL16SOMD71	VIT

*Please add the **suffixes** below according to the material/surface required.

EVT Standpipe branch tee

EO 24° cone end / EO stand pipe adjustable

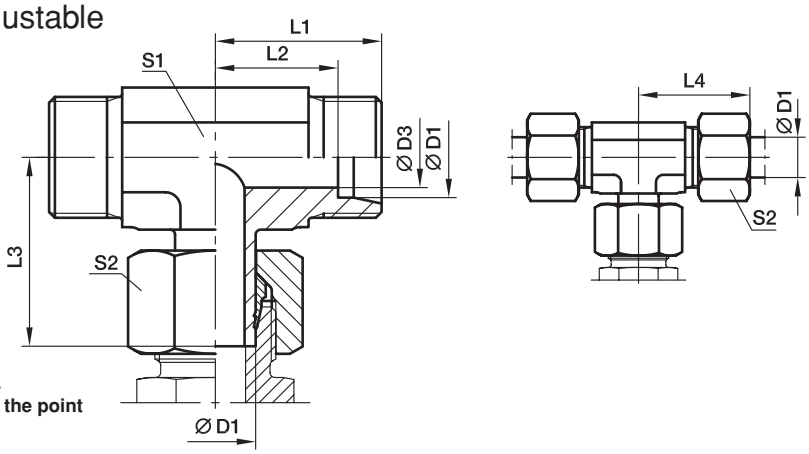

With pre-assembled nut and progressive ring for connection.
Final assembly (in appropriate body) at least 1/4 turn beyond the point of clearly perceptible resistance.

Series	D1	D3	L1	L2	L3	L4	S1	S2	Weight g/1 piece	Order code*	PN (bar)[1] CF	A3C	71	MS
L[3])	06	4	19	12.0	26.0	27	12	14	37	**EVT06LOMD**	315	315	315	200
	08	6	21	14.0	27.5	29	12	17	49	**EVT08LOMD**	315	315	315	200
	10	8	22	15.0	29.0	30	14	19	66	**EVT10LOMD**	315	315	315	200
	12	10	24	17.0	30.5	32	17	22	93	**EVT12LOMD**	315	315	315	200
	15	12	28	21.0	32.5	36	19	27	146	**EVT15LOMD**	315	315	315	200
	18	15	31	23.5	35.5	40	24	32	201	**EVT18LOMD**	315	315	315	200
	22	19	35	27.5	38.5	44	27	36	274	**EVT22LOMD**	160	160	160	
	28	24	38	30.5	43.5	47	36	41	441	**EVT28LOMD**	160	160	160	
	35	30	45	34.5	54.5	56	41	50	633	**EVT35LOMD**	160	160	160	
	42	36	51	40.0	60.0	63	50	60	1129	**EVT42LOMD**	160	160	160	
S[4])	06	4	23	16.0	27.0	31	12	17	61	**EVT06SOMD**	630	630	630	
	08	5	24	17.0	29.0	32	14	19	44	**EVT08SOMD**	630	630	630	
	10	7	25	17.5	31.0	34	17	22	84	**EVT10SOMD**	630	630	630	
	12	8	29	21.5	33.0	38	17	24	131	**EVT12SOMD**	630	630	630	
	14	10	30	22.0	35.0	40	19	27	173	**EVT14SOMD**	400	400	400	
	16	12	33	24.5	37.5	43	24	30	240	**EVT16SOMD**	400	400	400	
	20	16	37	26.5	44.5	48	27	36	345	**EVT20SOMD**	400	400	400	
	25	20	42	30.0	50.5	54	36	46	647	**EVT25SOMD**	400	400	400	
	30	25	49	35.5	56.5	62	41	50	873	**EVT30SOMD**	400	400	400	
	38	32	57	41.0	66.5	72	50	60	1361	**EVT38SOMD**	315	315	315	

[1]) Pressure shown = item deliverable

[3]) L = light series; [4]) S = heavy series

$\frac{\text{PN (bar)}}{10}$ = PN (MPa)

Delivery without nut and ring. Information on ordering complete fittings see page I7.

Order code suffixes		
Material	Suffix surface and material	Example
Steel, zinc plated, chrome[6]-free	CF	EVT16SOMDCF
Steel, zinc yellow plated	A3C	EVT16SOMDA3C
Stainless Steel	71	EVT16SOMD71
Brass	MS	EVT18LOMDMS

*Please add the **suffixes** below according to the material/surface required.

EVL standpipe run tee

EO 24° cone end / EO stand pipe adjustable

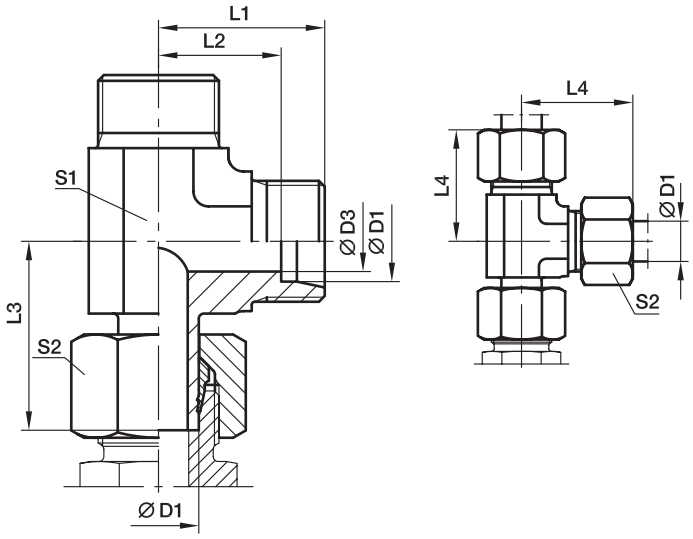

With pre-assembled nut and progressive ring for connection.
Final assembly (in appropriate body) at least 1/4 turn beyond the point of clearly perceptible resistance.

Series	D1	D3	L1	L2	L3	L4	S1	S2	Weight g/1 piece	Order code*	PN (bar)[1] CF	A3C	71	MS
L[3])	06	4	19	12.0	26.0	27	12	14	40	**EVL06LOMD**	315	315	315	200
	08	6	21	14.0	27.5	29	12	17	50	**EVL08LOMD**	315	315	315	200
	10	8	22	15.0	29.0	30	14	19	64	**EVL10LOMD**	315	315	315	200
	12	10	24	17.0	30.5	32	17	22	93	**EVL12LOMD**	315	315	315	200
	15	12	28	21.0	32.5	36	19	27	147	**EVL15LOMD**	315	315	315	200
	18	15	31	23.5	35.5	40	24	32	229	**EVL18LOMD**	315	315	315	200
	22	19	35	27.5	39.0	44	27	36	296	**EVL22LOMD**	160	160	160	
	28	24	38	30.5	43.5	47	36	41	416	**EVL28LOMD**	160	160	160	
	35	30	45	34.5	54.5	56	41	50	661	**EVL35LOMD**	160	160	160	
	42	36	51	40.0	60.0	63	50	60	1105	**EVL42LOMD**	160	160	160	
S[4])	06	4	23	16.0	27.0	31	12	17	57	**EVL06SOMD**	630	630	630	
	08	5	24	17.0	29.0	32	14	19	84	**EVL08SOMD**	630	630	630	
	10	7	25	17.5	32.0	34	17	22	116	**EVL10SOMD**	630	630	630	
	12	8	29	21.5	33.0	38	17	24	137	**EVL12SOMD**	630	630	630	
	14	10	30	22.0	35.0	40	19	27	175	**EVL14SOMD**	400	400	400	
	16	12	33	24.5	37.5	43	24	30	259	**EVL16SOMD**	400	400	400	
	20	16	37	26.5	44.5	48	27	36	371	**EVL20SOMD**	400	400	400	
	25	20	42	30.0	50.5	54	36	46	647	**EVL25SOMD**	400	400	400	
	30	25	49	35.5	56.5	62	41	50	906	**EVL30SOMD**	400	400	400	
	38	32	57	41.0	66.5	72	50	60	1549	**EVL38SOMD**	315	315	315	

[1]) Pressure shown = item deliverable

[3]) L = light series; [4]) S = heavy series

$$\frac{\text{PN (bar)}}{10} = \text{PN (MPa)}$$

Delivery without nut and ring. Information on ordering complete fittings see page I7.

Order code suffixes		
Material	Suffix surface and material	Example
Steel, zinc plated, chrome[6]-free	CF	EVL16SOMDCF
Steel, zinc yellow plated	A3C	EVL16SOMDA3C
Stainless Steel	71	EVL16SOMD71
Brass	MS	EVL18LOMDMS

*Please add the **suffixes** below according to the material/surface required.

ET-M-ED Assembled adjustable swivel branch tee

EO 24° cone end / Male metric thread – ED-seal (ISO 9974)

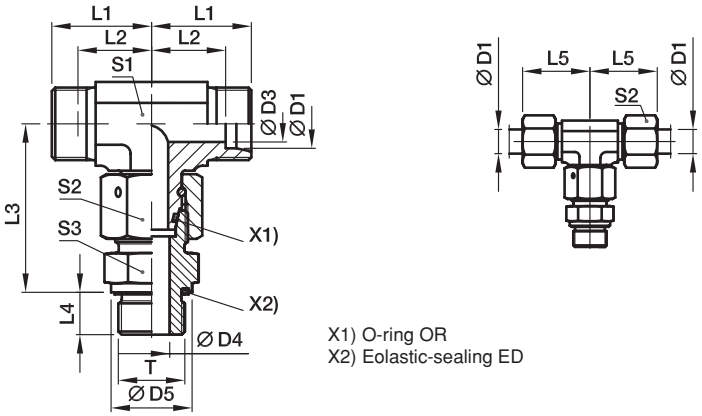

X1) O-ring OR
X2) Eolastic-sealing ED

Series	D1	T	D3	D4	D5	L1	L2	L3	L4	L5	S1	S2	S3	Weight g/1 piece	Order code*	PN (bar)[1] CF	A3C	71
L[3])	06	M 10×1	4	4	14	19	12.0	34.5	8	27	12	14	14	55	**ET06LMEDOMD**	500	315	315
	08	M 12×1.5	6	6	17	21	14.0	37.5	12	29	12	17	17	75	**ET08LMEDOMD**	500	315	315
	10	M 14×1.5	8	7	19	22	15.0	40.0	12	30	14	19	19	98	**ET10LMEDOMD**	500	315	315
	12	M 16×1.5	10	9	22	24	17.0	42.0	12	32	17	22	22	135	**ET12LMEDOMD**	400	315	315
	15	M 18×1.5	12	11	24	28	21.0	46.0	12	36	19	27	24	203	**ET15LMEDOMD**	400	315	315
	18	M 22×1.5	15	14	27	31	23.5	50.0	14	40	24	32	27	310	**ET18LMEDOMD**	400	315	315
	22	M 26×1.5	19	18	32	35	27.5	55.0	16	44	27	36	32	377	**ET22LMEDOMD**	250	160	160
	28	M 33×2	24	23	40	38	30.5	59.0	18	47	36	41	41	607	**ET28LMEDOMD**	250	160	160
	35	M 42×2	30	30	50	45	34.5	68.5	20	56	41	50	50	929	**ET35LMEDOMD**	250	160	160
	42	M 48×2	36	36	55	51	40.0	75.0	22	63	50	60	55	1478	**ET42LMEDOMD**	250	160	160
S[4])	06	M 12×1.5	4	4	17	23	16.0	40.0	12	31	12	17	17	92	**ET06SMEDOMD**	800	630	630
	08	M 14×1.5	5	5	19	24	17.0	42.5	12	32	14	19	19	126	**ET08SMEDOMD**	800	630	630
	10	M 16×1.5	6	7	22	25	17.5	45.0	12	34	17	22	22	167	**ET10SMEDOMD**	800	630	630
	12	M 18×1.5	8	8	24	29	21.5	48.0	12	38	17	24	24	207	**ET12SMEDOMD**	630	630	630
	14	M 20×1.5	9	10	26	30	22.0	54.0	14	40	19	27	27	287	**ET14SMEDOMD**	630	630	630
	16	M 22×1.5	12	12	27	33	24.5	55.0	14	43	24	30	27	352	**ET16SMEDOMD**	630	400	400
	20	M 27×2	16	16	32	37	26.5	65.0	16	48	27	36	32	498	**ET20SMEDOMD**	420	400	400
	25	M 33×2	20	20	40	42	30.0	73.0	18	54	36	46	41	916	**ET25SMEDOMD**	420	400	400
	30	M 42×2	25	25	50	49	35.5	78.5	20	62	41	50	50	1328	**ET30SMEDOMD**	420	400	400
	38	M 48×2	32	32	55	57	41.0	89.0	22	72	50	60	55	2031	**ET38SMEDOMD**	420	315	315

[1]) Pressure shown = item deliverable

[3]) L = light series; [4]) S = heavy series

$$\frac{\text{PN (bar)}}{10} = \text{PN (MPa)}$$

Delivery without nut and ring. Information on ordering complete fittings or alternative sealing materials see page I7.

*Please add the **suffixes** below according to the material/surface required.

Order code suffixes			
Material	Suffix surface and material	Example	Standard sealing material (no additonal. suffix needed)
Steel, zinc plated, chrome[6]-free	CF	ET16SMEDOMDCF	NBR
Steel, zinc yellow plated	A3C	ET16SMEDOMDA3C	NBR
Stainless Steel	71	ET16SMEDOMD71	VIT

ET-R-ED Assembled adjustable swivel branch tee

EO 24° cone end / Male BSPP thread – ED-seal (ISO 1179)

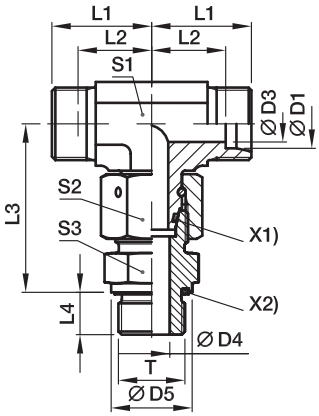

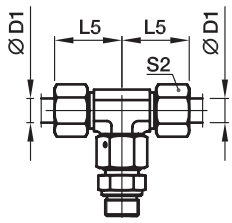

X1) O-ring OR
X2) Eolastic-sealing ED

Series	D1	T	D3	D4	D5	L1	L2	L3	L4	L5	S1	S2	S3	Weight g/1 piece	Order code*	PN (bar)[1] CF	A3C	71
L[3])	06	G 1/8 A	4	4	14	19	12.0	34.5	8	27	12	14	14	55	**ET06LREDOMD**	500	315	315
	08	G 1/4 A	6	6	19	21	14.0	37.5	12	29	12	17	19	80	**ET08LREDOMD**	500	315	315
	10	G 1/4 A	8	6	19	22	15.0	40.0	12	30	14	19	19	98	**ET10LREDOMD**	500	315	315
	12	G 3/8 A	10	9	22	24	17.0	42.0	12	32	17	22	22	136	**ET12LREDOMD**	400	315	315
	15	G 1/2 A	12	11	27	28	21.0	46.5	14	36	19	27	27	224	**ET15LREDOMD**	400	315	315
	18	G 1/2 A	15	14	27	31	23.5	50.0	14	40	24	32	27	306	**ET18LREDOMD**	400	315	315
	22	G 3/4 A	19	18	32	35	27.5	55.0	16	44	27	36	32	423	**ET22LREDOMD**	250	160	160
	28	G 1 A	24	23	40	38	30.5	59.0	18	47	36	41	41	608	**ET28LREDOMD**	250	160	160
	35	G 1 1/4 A	30	30	50	45	34.5	68.5	20	56	41	50	50	920	**ET35LREDOMD**	250	160	160
	42	G 1 1/2 A	36	36	55	51	40.0	75.0	22	63	50	60	55	1466	**ET42LREDOMD**	250	160	160
S[4])	06	G 1/4 A	4	4	19	23	16.0	40.0	12	31	12	17	19	98	**ET06SREDOMD**	800	630	630
	08	G 1/4 A	5	5	19	24	17.0	42.5	12	32	14	19	19	125	**ET08SREDOMD**	800	630	630
	10	G 3/8 A	6	7	22	25	17.5	45.0	12	34	17	22	22	169	**ET10SREDOMD**	800	630	630
	12	G 3/8 A	8	8	22	29	21.5	48.0	12	38	17	24	22	198	**ET12SREDOMD**	630	630	630
	14	G 1/2 A	9	10	27	30	22.0	54.0	14	40	19	27	27	287	**ET14SREDOMD**	630	630	630
	16	G 1/2 A	12	12	27	33	24.5	55.0	14	43	24	30	27	348	**ET16SREDOMD**	630	400	400
	20	G 3/4 A	16	16	32	37	26.5	65.0	16	48	27	36	32	498	**ET20SREDOMD**	420	400	400
	25	G 1 A	20	20	40	42	30.0	73.0	18	54	36	46	41	918	**ET25SREDOMD**	420	400	400
	30	G 1 1/4 A	25	25	50	49	35.5	78.5	20	62	41	50	50	1324	**ET30SREDOMD**	420	400	400
	38	G 1 1/2 A	32	32	55	57	41.0	89.0	22	72	50	60	55	2025	**ET38SREDOMD**	420	315	315

[1]) Pressure shown = item deliverable

[3]) L = light series; [4]) S = heavy series

$$\frac{\text{PN (bar)}}{10} = \text{PN (MPa)}$$

Delivery without nut and ring. Information on ordering complete fittings or alternative sealing materials see page I7.

*Please add the **suffixes** below according to the material/surface required.

Order code suffixes			
Material	Suffix surface and material	Example	Standard sealing material (no additonal. suffix needed)
Steel, zinc plated, chrome[6]-free	CF	ET16SREDOMDCF	NBR
Steel, zinc yellow plated	A3C	ET16SREDOMDA3C	NBR
Stainless Steel	71	ET16SREDOMD71	VIT

EL-M-ED Assembled adjustable swivel run tee

EO 24° cone end / Male metric thread – ED-seal (ISO 9974)

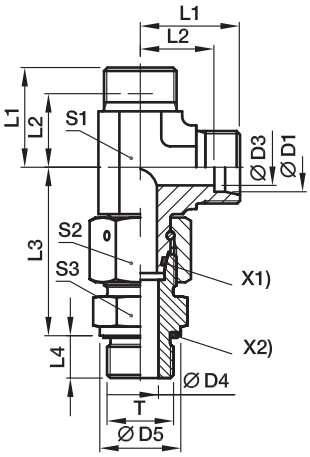

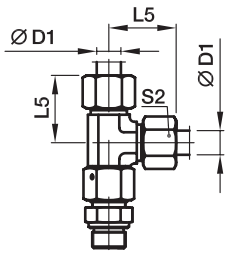

X1) O-ring OR
X2) Eolastic-sealing ED

Series	D1	T	D3	D4	D5	L1	L2	L3	L4	L5	S1	S2	S3	Weight g/1 piece	Order code*	PN (bar)[1] CF	A3C	71
L[3])	06	M 10×1	4	4	14	19	12.0	34.5	8	27	12	14	14	55	**EL06LMEDOMD**	500	315	315
	08	M 12×1.5	6	6	17	21	14.0	37.5	12	29	12	17	17	75	**EL08LMEDOMD**	500	315	315
	10	M 14×1.5	8	7	19	22	15.0	40.0	12	30	14	19	19	97	**EL10LMEDOMD**	500	315	315
	12	M 16×1.5	10	9	22	24	17.0	42.0	12	32	17	22	22	135	**EL12LMEDOMD**	400	315	315
	15	M 18×1.5	12	11	24	28	21.0	46.0	12	36	19	27	24	201	**EL15LMEDOMD**	400	315	315
	18	M 22×1.5	15	14	27	31	23.5	50.0	14	40	24	32	27	308	**EL18LMEDOMD**	400	315	315
	22	M 26×1.5	19	18	32	35	27.5	55.0	16	44	27	36	32	404	**EL22LMEDOMD**	250	160	160
	28	M 33×2	24	23	40	38	30.5	59.0	18	47	36	41	41	605	**EL28LMEDOMD**	250	160	160
	35	M 42×2	30	30	50	45	34.5	68.5	20	56	41	50	50	947	**EL35LMEDOMD**	250	160	160
	42	M 48×2	36	36	55	51	40.0	75.0	22	63	50	60	55	1497	**EL42LMEDOMD**	250	160	160
S[4])	06	M 12×1.5	4	4	17	23	16.0	40.0	12	31	12	17	17	91	**EL06SMEDOMD**	800	630	630
	08	M 14×1.5	5	5	19	24	17.0	42.5	12	32	14	19	19	126	**EL08SMEDOMD**	800	630	630
	10	M 16×1.5	6	7	22	25	17.5	45.0	12	34	17	22	22	169	**EL10SMEDOMD**	800	630	630
	12	M 18×1.5	8	8	24	29	21.5	48.0	12	38	17	24	24	206	**EL12SMEDOMD**	630	630	630
	14	M 20×1.5	9	10	26	30	22.0	54.0	14	40	19	27	27	275	**EL14SMEDOMD**	630	630	630
	16	M 22×1.5	12	12	27	33	24.5	55.0	14	43	24	30	27	354	**EL16SMEDOMD**	630	400	400
	20	M 27×2	16	16	32	37	26.5	65.0	16	48	27	36	32	526	**EL20SMEDOMD**	420	400	400
	25	M 33×2	20	20	40	42	30.0	73.0	18	54	36	46	41	919	**EL25SMEDOMD**	420	400	400
	30	M 42×2	25	25	50	49	35.5	78.5	20	62	41	50	50	1328	**EL30SMEDOMD**	420	400	400
	38	M 48×2	32	32	55	57	41.0	89.0	22	72	50	60	55	2039	**EL38SMEDOMD**	420	315	315

[1]) Pressure shown = item deliverable

[3]) L = light series; [4]) S = heavy series

$$\frac{\text{PN (bar)}}{10} = \text{PN (MPa)}$$

Delivery without nut and ring. Information on ordering complete fittings or alternative sealing materials see page I7.

Order code suffixes			
Material	Suffix surface and material	Example	Standard sealing material (no additonal. suffix needed)
Steel, zinc plated, chrome[6]-free	CF	EL16SMEDOMDCF	NBR
Steel, zinc yellow plated	A3C	EL16SMEDOMDA3C	NBR
Stainless Steel	71	EL16SMEDOMD71	VIT

*Please add the **suffixes** below according to the material/surface required.

EL-R-ED Assembled adjustable swivel run tee

EO 24° cone end / Male BSPP thread – ED-seal (ISO 1179)

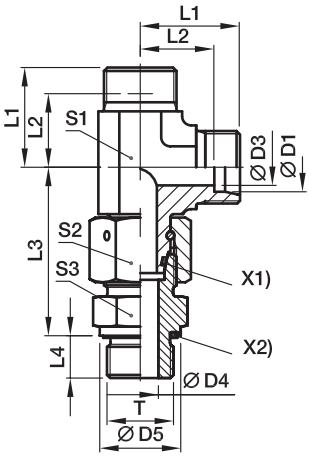

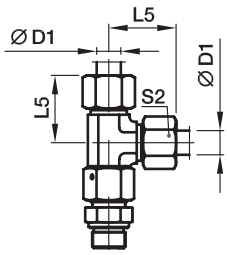

X1) O-ring OR
X2) Eolastic-sealing ED

Series	D1	T	D3	D4	D5	L1	L2	L3	L4	L5	S1	S2	S3	Weight g/1 piece	Order code*	PN (bar)[1] CF	A3C	71
L[3])	06	G 1/8 A	4	4	14	19	12.0	34.5	8	27	12	14	14	55	**EL06LREDOMD**	500	315	315
	08	G 1/4 A	6	6	19	21	14.0	37.5	12	29	12	17	19	80	**EL08LREDOMD**	500	315	315
	10	G 1/4 A	8	6	19	22	15.0	40.0	12	30	14	19	19	97	**EL10LREDOMD**	500	315	315
	12	G 3/8 A	10	9	22	24	17.0	42.0	12	32	17	22	22	137	**EL12LREDOMD**	400	315	315
	15	G 1/2 A	12	11	27	28	21.0	46.5	14	36	19	27	27	222	**EL15LREDOMD**	400	315	315
	18	G 1/2 A	15	14	27	31	23.5	50.0	14	40	24	32	27	304	**EL18LREDOMD**	400	315	315
	22	G 3/4 A	19	18	32	35	27.5	55.0	16	44	27	36	32	404	**EL22LREDOMD**	250	160	160
	28	G 1 A	24	23	40	38	30.5	59.0	18	47	36	41	41	606	**EL28LREDOMD**	250	160	160
	35	G 1 1/4 A	30	30	50	45	34.5	68.5	20	56	41	50	50	938	**EL35LREDOMD**	250	160	160
	42	G 1 1/2 A	36	36	55	51	40.0	75.0	22	63	50	60	55	1485	**EL42LREDOMD**	250	160	160
S[4])	06	G 1/4 A	4	4	19	23	16.0	40.0	12	31	12	17	19	97	**EL06SREDOMD**	800	630	630
	08	G 1/4 A	5	5	19	24	17.0	42.5	12	32	14	19	19	125	**EL08SREDOMD**	800	630	630
	10	G 3/8 A	6	7	22	25	17.5	45.0	12	34	17	22	22	171	**EL10SREDOMD**	800	630	630
	12	G 3/8 A	8	8	22	29	21.5	48.0	12	38	17	24	22	198	**EL12SREDOMD**	630	630	630
	14	G 1/2 A	9	10	27	30	22.0	54.0	14	40	19	27	27	269	**EL14SREDOMD**	630	630	630
	16	G 1/2 A	12	12	27	33	24.5	55.0	14	43	24	30	27	350	**EL16SREDOMD**	630	400	400
	20	G 3/4 A	16	16	32	37	26.5	65.0	16	48	27	36	32	524	**EL20SREDOMD**	420	400	400
	25	G 1 A	20	20	40	42	30.0	73.0	18	54	36	46	41	921	**EL25SREDOMD**	420	400	400
	30	G 1 1/4 A	25	25	50	49	35.5	78.5	20	62	41	50	50	1324	**EL30SREDOMD**	420	400	400
	38	G 1 1/2 A	32	32	55	57	41.0	89.0	22	72	50	60	55	2033	**EL38SREDOMD**	420	315	315

[1]) Pressure shown = item deliverable

[3]) L = light series; [4]) S = heavy series

$$\frac{\text{PN (bar)}}{10} = \text{PN (MPa)}$$

Delivery without nut and ring. Information on ordering complete fittings or alternative sealing materials see page I7.

*Please add the **suffixes** below according to the material/surface required.

Order code suffixes			
Material	Suffix surface and material	Example	Standard sealing material (no additonal. suffix needed)
Steel, zinc plated, chrome[6]-free	CF	EL16SREDOMDCF	NBR
Steel, zinc yellow plated	A3C	EL16SREDOMDA3C	NBR
Stainless Steel	71	EL16SREDOMD71	VIT

EVT-M Assembled adjustable standpipe branch tee

EO 24° cone end / Male metric thread – metal sealing edge (ISO 9974)

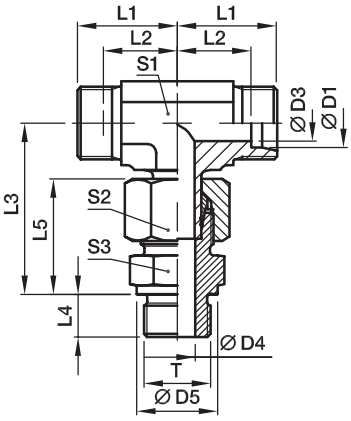

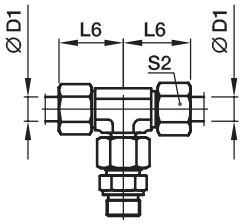

Pre-assembled, complete with straight male stud connector (with cutting face). Final assembly (in appropriate body) at least 1/4 turn beyond the point of clearly perceptible resistance.

Series	D1	T	D3	D4	D5	L1	L2	L3	L4	L5	L6	S1	S2	S3	Weight g/1 piece	Order code*	PN (bar)[1] CF	A3C	71
L[3])	06	M 10×1	4	4	14	19	12.0	34.5	8	23	27	12	14	14	48	**EVT06LMOMD**	315	315	315
	08	M 12×1.5	6	6	17	21	14.0	37.5	12	25	29	12	17	17	68	**EVT08LMOMD**	315	315	315
	10	M 14×1.5	8	7	19	22	15.0	40.0	12	26	30	14	19	19	88	**EVT10LMOMD**	315	315	315
	12	M 16×1.5	10	9	21	24	17.0	43.0	12	27	32	17	22	22	116	**EVT12LMOMD**	315	315	315
	15	M 18×1.5	12	11	23	28	21.0	46.0	12	29	36	19	27	24	185	**EVT15LMOMD**	250	250	250
	18	M 22×1.5	15	14	27	31	23.5	50.0	14	31	40	24	32	27	272	**EVT18LMOMD**	250	250	250
	22	M 26×1.5	19	18	31	35	27.5	55.5	16	33	44	27	36	32	367	**EVT22LMOMD**	160	160	160
	28	M 33×2	24	23	39	38	30.5	61.0	18	34	47	36	41	41	565	**EVT28LMOMD**	160	160	160
	35	M 42×2	30	30	49	45	34.5	72.0	20	39	56	41	50	50	905	**EVT35LMOMD**	160	160	160
	42	M 48×2	36	36	55	51	40.0	79.0	22	42	63	50	60	55	1282	**EVT42LMOMD**	160	160	160
S[4])	06	M 12×1.5	4	4	17	23	16.0	40.0	12	28	31	12	17	17	85	**EVT06SMOMD**	400	400	400
	08	M 14×1.5	5	5	19	24	17.0	44.0	12	30	32	14	19	19	118	**EVT08SMOMD**	400	400	400
	10	M 16×1.5	7	7	21	25	17.5	47.0	12	31	34	17	22	22	149	**EVT10SMOMD**	400	400	400
	12	M 18×1.5	8	8	23	29	21.5	50.0	12	33	38	17	24	24	200	**EVT12SMOMD**	400	400	400
	14	M 20×1.5	10	10	25	30	22.0	54.0	14	37	40	19	27	27	264	**EVT14SMOMD**	400	400	400
	16	M 22×1.5	12	12	27	33	24.5	55.0	14	37	43	24	30	27	327	**EVT16SMOMD**	400	400	400
	20	M 27×2	16	16	32	37	26.5	65.0	16	42	48	27	36	32	482	**EVT20SMOMD**	400	400	400
	25	M 33×2	20	20	39	42	30.0	73.5	18	47	54	36	46	41	906	**EVT25SMOMD**	250	250	250
	30	M 42×2	25	25	49	49	35.5	80.0	20	50	62	41	50	50	1274	**EVT30SMOMD**	160	160	160
	38	M 48×2	32	32	55	57	41.0	92.5	22	57	72	50	60	55	1928	**EVT38SMOMD**	160	160	160

[1]) Pressure shown = item deliverable

[3]) L = light series; [4]) S = heavy series

$$\frac{\text{PN (bar)}}{10} = \text{PN (MPa)}$$

Delivery without nut and ring. Information on ordering complete fittings see page I7.

*Please add the **suffixes** below according to the material/surface required.

Order code suffixes		
Material	Suffix surface and material	Example
Steel, zinc plated, chrome[6]-free	CF	EVT16SMOMDCF
Steel, zinc yellow plated	A3C	EVT16SMOMDA3C
Stainless Steel	71	EVT16SMOMD71

EVT-R Assembled adjustable standpipe branch tee

EO 24° cone end / Male BSPP thread – metal sealing edge (ISO 1179)

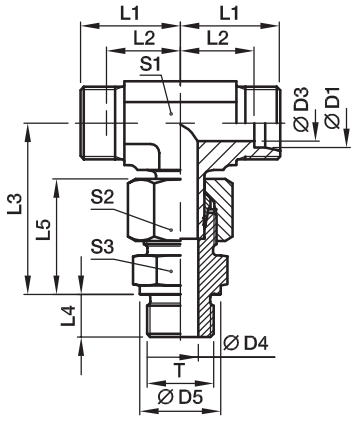

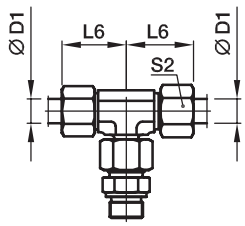

Pre-assembled, complete with straight male stud connector (with cutting face). Final assembly (in appropriate body) at least 1/4 turn beyond the point of clearly perceptible resistance.

Series	D1	T	D3	D4	D5	L1	L2	L3	L4	L5	L6	S1	S2	S3	Weight g/1 piece	Order code*	PN (bar)[1] CF	A3C	71
L[3])	06	G 1/8 A	4	4	14	19	12.0	34.5	8	23	27	12	14	14	48	**EVT06LROMD**	315	315	315
	08	G 1/4 A	6	6	18	21	14.0	37.5	12	25	29	12	17	19	73	**EVT08LROMD**	315	315	315
	10	G 1/4 A	8	6	18	22	15.0	40.0	12	26	30	14	19	19	85	**EVT10LROMD**	315	315	315
	12	G 3/8 A	10	9	22	24	17.0	43.0	12	27	32	17	22	22	118	**EVT12LROMD**	315	315	315
	15	G 1/2 A	12	11	26	28	21.0	46.5	14	29	36	19	27	27	206	**EVT15LROMD**	250	250	250
	18	G 1/2 A	15	14	26	31	23.5	50.0	14	31	40	24	32	27	267	**EVT18LROMD**	250	250	250
	22	G 3/4 A	19	18	32	35	27.5	55.5	16	33	44	27	36	32	367	**EVT22LROMD**	160	160	160
	28	G 1 A	24	23	39	38	30.5	61.0	18	34	47	36	41	41	565	**EVT28LROMD**	160	160	160
	35	G 1 1/4 A	30	30	49	45	34.5	72.0	20	39	56	41	50	50	901	**EVT35LROMD**	160	160	160
	42	G 1 1/2 A	36	36	55	51	40.0	79.0	22	42	63	50	60	55	1277	**EVT42LROMD**	160	160	160
S[4])	06	G 1/4 A	4	4	18	23	16.0	40.0	12	28	31	12	17	19	90	**EVT06SROMD**	400	400	400
	08	G 1/4 A	5	5	18	24	17.0	44.0	12	30	32	14	19	19	116	**EVT08SROMD**	400	400	400
	10	G 3/8 A	7	7	22	25	17.5	47.0	12	31	34	17	22	22	151	**EVT10SROMD**	400	400	400
	12	G 3/8 A	8	8	22	29	21.5	50.0	12	33	38	17	24	22	190	**EVT12SROMD**	400	400	400
	14	G 1/2 A	10	10	26	30	22.0	54.0	14	37	40	19	27	27	265	**EVT14SROMD**	400	400	400
	16	G 1/2 A	12	12	26	33	24.5	55.0	14	37	43	24	30	27	322	**EVT16SROMD**	400	400	400
	20	G 3/4 A	16	16	32	37	26.5	65.0	16	42	48	27	36	32	500	**EVT20SROMD**	400	400	400
	25	G 1 A	20	20	39	42	30.0	73.5	18	47	54	36	46	41	905	**EVT25SROMD**	250	250	250
	30	G 1 1/4 A	25	25	49	49	35.5	80.0	20	50	62	41	50	50	1275	**EVT30SROMD**	160	160	160
	38	G 1 1/2 A	32	32	55	57	41.0	92.5	22	57	72	50	60	55	1920	**EVT38SROMD**	160	160	160

[1]) Pressure shown = item deliverable

[3]) L = light series; [4]) S = heavy series

$$\frac{\text{PN (bar)}}{10} = \text{PN (MPa)}$$

Delivery without nut and ring. Information on ordering complete fittings see page I7.

Order code suffixes		
Material	Suffix surface and material	Example
Steel, zinc plated, chrome[6]-free	CF	EVT16SROMDCF
Steel, zinc yellow plated	A3C	EVT16SROMDA3C
Stainless Steel	71	EVT16SROMD71

*Please add the **suffixes** below according to the material/surface required.

EVL-M Assembled adjustable standpipe run tee

EO 24° cone end / Male metric thread – metal sealing edge (ISO 9974)

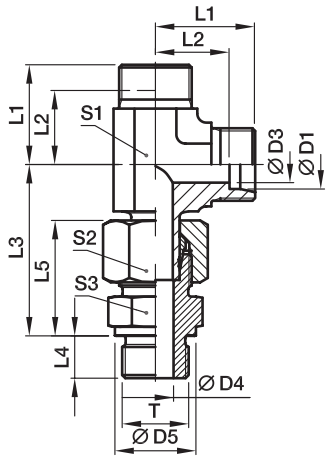

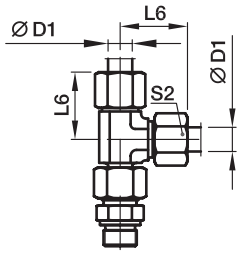

Pre-assembled, complete with straight male stud connector (with cutting face). Final assembly (in appropriate body) at least 1/4 turn beyond the point of clearly perceptible resistance.

Series	D1	T	D3	D4	D5	L1	L2	L3	L4	L5	L6	S1	S2	S3	Weight g/1 piece	Order code*	PN (bar)[1] CF	A3C	71
L[3])	06	M 10×1	4	4	14	19	12.0	34.5	8	23	27	12	14	14	48	**EVL06LMOMD**	315	315	315
	08	M 12×1.5	6	6	17	21	14.0	37.5	12	25	29	12	17	17	73	**EVL08LMOMD**	315	315	315
	10	M 14×1.5	8	7	19	22	15.0	40.0	12	26	30	14	19	19	89	**EVL10LMOMD**	315	315	315
	12	M 16×1.5	10	9	21	24	17.0	43.0	12	27	32	17	22	22	118	**EVL12LMOMD**	315	315	315
	15	M 18×1.5	12	11	23	28	21.0	46.0	12	29	36	19	27	24	186	**EVL15LMOMD**	250	250	250
	18	M 22×1.5	15	14	27	31	23.5	50.0	14	31	40	24	32	27	269	**EVL18LMOMD**	250	250	250
	22	M 26×1.5	19	18	31	35	27.5	55.5	16	33	44	27	36	32	364	**EVL22LMOMD**	160	160	160
	28	M 33×2	24	23	39	38	30.5	61.0	18	34	47	36	41	41	556	**EVL28LMOMD**	160	160	160
	35	M 42×2	30	30	49	45	34.5	72.0	20	39	56	41	50	50	900	**EVL35LMOMD**	160	160	160
	42	M 48×2	36	36	55	51	40.0	79.0	22	42	63	50	60	55	1323	**EVL42LMOMD**	160	160	160
S[4])	06	M 12×1.5	4	4	17	23	16.0	40.0	12	28	31	12	17	17	85	**EVL06SMOMD**	400	400	400
	08	M 14×1.5	5	5	19	24	17.0	44.0	12	30	32	14	19	19	119	**EVL08SMOMD**	400	400	400
	10	M 16×1.5	7	7	21	25	17.5	47.0	12	31	34	17	22	22	151	**EVL10SMOMD**	400	400	400
	12	M 18×1.5	8	8	23	29	21.5	50.0	12	33	38	17	24	24	202	**EVL12SMOMD**	400	400	400
	14	M 20×1.5	10	10	25	30	22.0	54.0	14	37	40	19	27	27	264	**EVL14SMOMD**	400	400	400
	16	M 22×1.5	12	12	27	33	24.5	56.0	14	37	43	24	30	27	326	**EVL16SMOMD**	400	400	400
	20	M 27×2	16	16	32	37	26.5	65.0	16	42	48	27	36	32	481	**EVL20SMOMD**	400	400	400
	25	M 33×2	20	20	39	42	30.0	73.5	18	47	54	36	46	41	904	**EVL25SMOMD**	250	250	250
	30	M 42×2	25	25	49	49	35.5	80.0	20	50	62	41	50	50	1263	**EVL30SMOMD**	160	160	160
	38	M 48×2	32	32	55	57	41.0	92.5	22	57	72	50	60	55	1936	**EVL38SMOMD**	160	160	160

[1]) Pressure shown = item deliverable

[3]) L = light series; [4]) S = heavy series

$$\frac{\text{PN (bar)}}{10} = \text{PN (MPa)}$$

Delivery without nut and ring. Information on ordering complete fittings see page I7.

*Please add the **suffixes** below according to the material/surface required.

Order code suffixes		
Material	Suffix surface and material	Example
Steel, zinc plated, chrome[6]-free	CF	EVL16SMOMDCF
Steel, zinc yellow plated	A3C	EVL16SMOMDA3C
Stainless Steel	71	EVL16SMOMD71

EVL-R Assembled adjustable standpipe run tee

EO 24° cone end / Male BSPP thread – metal sealing edge (ISO 1179)

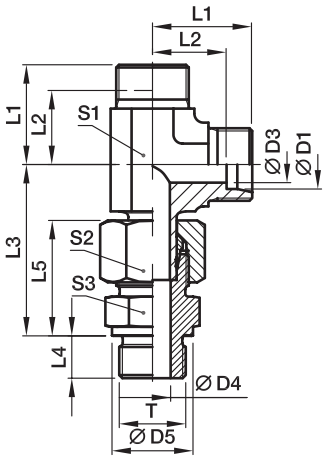

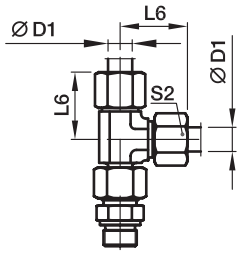

Pre-assembled, complete with straight male stud connector (with cutting face). Final assembly (in appropriate body) at least 1/4 turn beyond the point of clearly perceptible resistance.

Series	D1	T	D3	D4	D5	L1	L2	L3	L4	L5	L6	S1	S2	S3	Weight g/1 piece	Order code*	PN (bar)[1] CF	A3C	71
L[3])	06	G 1/8 A	4	4	14	19	12.0	34.5	8	23	27	12	14	14	48	**EVL06LROMD**	315	315	315
	08	G 1/4 A	6	6	18	21	14.0	37.5	12	25	29	12	17	19	73	**EVL08LROMD**	315	315	315
	10	G 1/4 A	8	6	18	22	15.0	40.0	12	26	30	14	19	19	87	**EVL10LROMD**	315	315	315
	12	G 3/8 A	10	9	22	24	17.0	43.0	12	27	32	17	22	22	120	**EVL12LROMD**	315	315	315
	15	G 1/2 A	12	11	26	28	21.0	46.5	14	29	36	19	27	27	207	**EVL15LROMD**	250	250	250
	18	G 1/2 A	15	14	26	31	23.5	50.0	14	31	40	24	32	27	264	**EVL18LROMD**	250	250	250
	22	G 3/4 A	19	18	32	35	27.5	55.5	16	33	44	27	36	32	365	**EVL22LROMD**	160	160	160
	28	G 1 A	24	23	39	38	30.5	61.0	18	34	47	36	41	41	556	**EVL28LROMD**	160	160	160
	35	G 1 1/4 A	30	30	49	45	34.5	72.0	20	39	56	41	50	50	895	**EVL35LROMD**	160	160	160
	42	G 1 1/2 A	36	36	55	51	40.0	79.0	22	42	63	50	60	55	1318	**EVL42LROMD**	160	160	160
S[4])	06	G 1/4 A	4	4	18	23	16.0	40.0	12	28	31	12	17	19	90	**EVL06SROMD**	400	400	400
	08	G 1/4 A	5	5	18	24	17.0	44.0	12	30	32	14	19	19	117	**EVL08SROMD**	400	400	400
	10	G 3/8 A	7	7	22	25	17.5	47.0	12	31	34	17	22	22	153	**EVL10SROMD**	400	400	400
	12	G 3/8 A	8	8	22	29	21.5	50.0	12	33	38	17	24	22	192	**EVL12SROMD**	400	400	400
	14	G 1/2 A	10	10	26	30	22.0	54.0	14	37	40	19	27	27	266	**EVL14SROMD**	400	400	400
	16	G 1/2 A	12	12	26	33	24.5	56.0	14	37	43	24	30	27	321	**EVL16SROMD**	400	400	400
	20	G 3/4 A	16	16	32	37	26.5	65.0	16	42	48	27	36	32	480	**EVL20SROMD**	400	400	400
	25	G 1 A	20	20	39	42	30.0	73.5	18	47	54	36	46	41	903	**EVL25SROMD**	250	250	250
	30	G 1 1/4 A	25	25	49	49	35.5	80.0	20	50	62	41	50	50	1265	**EVL30SROMD**	160	160	160
	38	G 1 1/2 A	32	32	55	57	41.0	92.5	22	57	72	50	60	55	1928	**EVL38SROMD**	160	160	160

[1]) Pressure shown = item deliverable

[3]) L = light series; [4]) S = heavy series

$$\frac{\text{PN (bar)}}{10} = \text{PN (MPa)}$$

Delivery without nut and ring. Information on ordering complete fittings see page I7.

*Please add the **suffixes** below according to the material/surface required.

Order code suffixes		
Material	Suffix surface and material	Example
Steel, zinc plated, chrome[6]-free	CF	EVL16SROMDCF
Steel, zinc yellow plated	A3C	EVL16SROMDA3C
Stainless Steel	71	EVL16SROMD71

TEE-OR Adjustable locknut branch tee

EO 24° cone end / Adjustable metric thread – O-ring (ISO 6149)

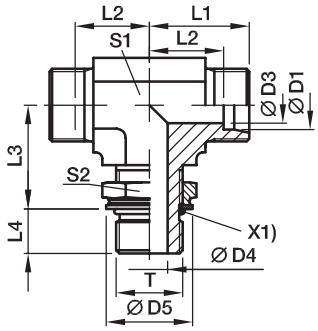

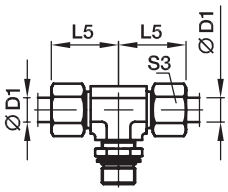

X1) O-ring OR

Series	D1	T	D3	D4	D5	L1	L2	L3	L4	L5	S1	S2	S3	Weight g/1 piece	Order code*	PN (bar)[1] CF	PN (bar)[1] A3C
L[3])	06	M10×1	4	4.5	15	21	14	20	7	29	14	14	14	53	**TEE06LMOROMD**	315	315
	08	M12×1.5	6	6.0	18	23	16	22	10	31	14	17	17	63	**TEE08LMOROMD**	315	315
	10	M14×1.5	8	7.5	20	24	17	25	10	32	19	19	19	111	**TEE10LMOROMD**	315	315
	12	M16×1.5	10	9.0	23	26	19	26	10	34	19	22	22	110	**TEE12LMOROMD**	315	315
	15	M18×1.5	12	11.0	25	28	21	30	11	36	22	24	27	163	**TEE15LMOROMD**	315	315
	18	M22×1.5	15	14.0	28	31	24	33	12	40	27	27	32	272	**TEE18LMOROMD**	315	315
	22	M27×2	19	18.0	33	35	28	35	14	44	30	32	36	315	**TEE22LM27X2OROMD**	160	160
	28	M33×2	24	23.0	41	38	31	38	14	47	36	41	41	477	**TEE28LMOROMD**	160	160
	35	M42×2	30	30.0	51	48	38	48	14	59	50	50	50	477	**TEE35LMOROMD**	160	160
	42	M48×2	36	36.0	56	49	38	49	16	61	50	55	60	950	**TEE42LMOROMD**	160	160
S[4])	06	M12×1.5	4	4.0	18	22	15	22	10	30	14	17	17	72	**TEE06SMOROMD**	400	400
	08	M14×1.5	5	6.0	20	24	17	26	10	32	19	19	19	118	**TEE08SMOROMD**	400	400
	10	M16×1.5	7	7.0	23	25	18	27	11	34	19	22	22	131	**TEE10SMOROMD**	400	400
	12	M18×1.5	8	9.0	25	29	22	31	12	38	22	24	24	192	**TEE12SMOROMD**	400	400
	16	M22×1.5	12	12.0	28	33	25	35	14	43	27	27	30	295	**TEE16SMOROMD**	400	400
	20	M27×2	16	15.0	33	38	28	39	16	49	30	32	36	423	**TEE20SMOROMD**	400	400
	25	M33×2	20	20.0	41	42	30	44	16	54	36	41	46	665	**TEE25SMOROMD**	315	315
	30	M42×2	25	26.0	51	49	36	51	17	62	50	50	50	1347	**TEE30SMOROMD**	250	250
	38	M48×2	32	32.0	56	50	34	54	19	65	50	55	60	1324	**TEE38SMOROMD**	200	200

[1]) Pressure shown = item deliverable

[3]) L = light series; [4]) S = heavy series

$\frac{\text{PN (bar)}}{10}$ = PN (MPa)

Delivery without nut and ring. Information on ordering complete fittings or alternative sealing materials see page I7.

*Please add the **suffixes** below according to the material/surface required.

Order code suffixes			
Material	Suffix surface and material	Example	Standard sealing material (no additonal. suffix needed)
Steel, zinc plated, chrome[6]-free	CF	TEE16SMOROMDCF	NBR
Steel, zinc yellow plated	A3C	TEE16SMOROMDA3C	NBR

TEE-M Adjustable locknut branch tee

EO 24° cone end / Adjustable metric thread – O-ring + retaining ring

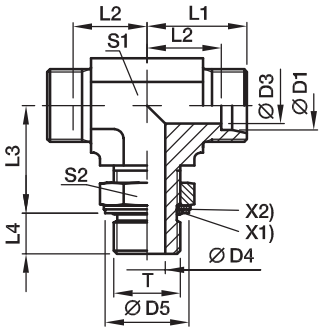

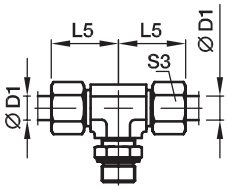

X1) O-ring OR
X2) retaining ring

Series	D1	T	D3	D4	D5	L1	L2	L3	L4	L5	S1	S2	S3	Weight g/1 piece	Order code*	PN (bar)[1] CF	A3C	71
L[3])	06	M10×1	4	4.5	15	21	14	20	7	29	14	13	14	52	**TEE06LMOMD**	315	315	315
	08	M12×1.5	6	6.0	18	23	16	22	10	31	14	17	17	63	**TEE08LMOMD**	315	315	315
	10	M14×1.5	8	7.5	20	24	17	25	9	32	19	17	19	99	**TEE10LMOMD**	315	315	315
	12	M16×1.5	10	9.0	23	26	19	26	9	34	19	19	22	106	**TEE12LMOMD**	315	315	315
	15	M18×1.5	12	11.0	25	28	21	30	11	36	22	22	27	162	**TEE15LMOMD**	315	315	315
	18	M22×1.5	15	14.0	28	31	24	33	11	40	27	27	32	248	**TEE18LMOMD**	250	250	250
	22	M27×2	19	18.0	33	35	28	35	14	44	30	32	36	319	**TEE22LM27X2OMD**	160	160	160
	28	M33×2	24	23.0	41	38	31	38	14	47	36	38	41	472	**TEE28LMOMD**	160	160	160
	35	M42×2	30	30.0	51	48	38	48	14	59	50	50	50	1147	**TEE35LMOMD**	160	160	160
	42	M48×2	36	36.0	56	49	38	49	16	61	50	55	60	1020	**TEE42LMOMD**	160	160	160
S[4])	06	M12×1.5	4	4.0	18	22	15	22	10	30	14	17	17	73	**TEE06SMOMD**	315	315	315
	08	M14×1.5	5	6.0	20	24	17	26	10	32	19	17	19	124	**TEE08SMOMD**	315	315	315
	10	M16×1.5	7	7.0	23	25	18	27	11	34	19	19	22	125	**TEE10SMOMD**	315	315	315
	12	M18×1.5	8	9.0	25	29	22	31	12	38	22	22	24	184	**TEE12SMOMD**	315	315	315
	16	M22×1.5	12	12.0	28	33	25	35	14	43	27	27	30	291	**TEE16SMOMD**	250	250	250
	20	M27×2	16	15.0	33	38	28	39	16	49	30	32	36	418	**TEE20SMOMD**	250	250	250
	25	M33×2	20	20.0	41	42	30	44	16	54	36	38	46	642	**TEE25SMOMD**	160	160	160
	30	M42×2	25	26.0	51	49	36	51	17	62	50	50	50	1335	**TEE30SMOMD**	160	160	160
	38	M48×2	32	32.0	56	50	34	54	19	65	50	55	60	1300	**TEE38SMOMD**	160	160	160

[1]) Pressure shown = item deliverable

[3]) L = light series; [4]) S = heavy series

$\frac{\text{PN (bar)}}{10}$ = PN (MPa)

Delivery without nut and ring. Information on ordering complete fittings or alternative sealing materials see page I7.

*Please add the **suffixes** below according to the material/surface required.

Order code suffixes			
Material	Suffix surface and material	Example	Standard sealing material (no additonal. suffix needed)
Steel, zinc plated, chrome[6]-free	CF	TEE16SMOMDCF	NBR
Steel, zinc yellow plated	A3C	TEE16SMOMDA3C	NBR
Stainless Steel	71	TEE16SMOMD71	VIT

TEE-R Adjustable locknut branch tee

EO 24° cone end / Adjustable BSPP thread – O-ring + retaining ring (ISO 1179)
for ports with small or wide spot face;
differences in D5 in Stainless Steel are only for ports with wide spot face
(e. g. TEE16SRBOMD71)

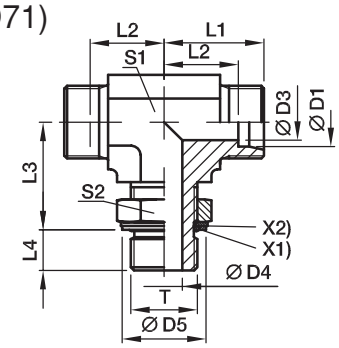

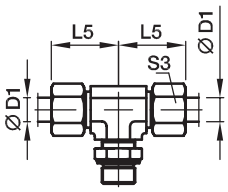

X1) O-ring OR
X2) retaining ring

Series	D1	T	D3	D4	D5[5])	D5[6])	L1	L2	L3	L4	L5	S1	S2	S3	Weight g/1 piece	Order code*	PN (bar)[1]) CF	A3C	71
L[3])	06	G 1/8A	4	4.5	15	15.0	21	14	19	7	29	14	14	14	52	**TEE06LROMD**	315	315	315
	08	G 1/4A	6	7.5	20	20.0	23	16	23	9	31	14	19	17	75	**TEE08LROMD**	315	315	315
	10	G 1/4A	8	7.5	20	20.0	24	17	25	9	32	19	19	19	107	**TEE10LROMD**	315	315	315
	12	G 3/8A	10	10.0	23	23.5	26	19	28	9	34	19	22	22	114	**TEE12LROMD**	250	250	250
	15	G 1/2A	12	12.5	28	28.5	28	21	30	13	36	22	27	27	183	**TEE15LROMD**	250	250	250
	18	G 1/2A	15	12.5	28	28.5	31	24	36	13	40	27	27	32	271	**TEE18LROMD**	250	250	250
	22	G 3/4A	19	15.5	33	34.5	35	28	36	13	44	30	36	36	357	**TEE22LROMD**	160	160	160
	28	G 1A	24	21.5	41	43.5	38	31	44	15	47	36	41	41	545	**TEE28LROMD**	160	160	160
	35	G 1 1/4A	30	27.5	51	52.5	48	38	50	15	59	50	50	50	1188	**TEE35LROMD**	160	160	160
	42	G 1 1/2A	36	33.0	56	60.0	49	38	52	15	61	50	50	60	1122	**TEE42LROMD**	160	160	160
S[4])	06	G 1/4A	4	7.5	20	20.0	22	15	23	9	30	14	19	17	73	**TEE06SROMD**	315	315	315
	08	G 1/4A	5	7.5	20	20.0	24	17	27	9	32	19	19	19	115	**TEE08SROMD**	315	315	315
	10	G 3/8A	7	10.0	23	23.5	25	18	29	9	34	19	22	22	126	**TEE10SROMD**	250	250	250
	12	G 3/8A	8	10.0	23	23.5	29	22	29	9	38	22	22	24	171	**TEE12SROMD**	250	250	250
	16	G 1/2A	12	12.5	28	28.5	33	25	36	13	43	27	27	30	292	**TEE16SROMD**	250	250	250
	20	G 3/4A	16	15.5	33	34.5	38	28	39	12	49	30	36	36	416	**TEE20SROMD**	250	250	250
	25	G 1A	20	21.5	41	43.5	42	30	44	14	54	36	41	46	644	**TEE25SROMD**	250	250	250
	30	G 1 1/4A	25	27.5	51	52.5	49	36	49	15	62	50	50	50	1285	**TEE30SROMD**	160	160	160
	38	G 1 1/2A	32	33.0	56	60.0	50	34	55	15	65	50	55	60	1272	**TEE38SROMD**	160	160	160

[1]) Pressure shown = item deliverable

[3]) L = light series; [4]) S = heavy series

$\frac{\text{PN (bar)}}{10}$ = PN (MPa)

Delivery without nut and ring. Information on ordering complete fittings or alternative sealing materials see page I7.

[5]) Steel; [6]) Stainless Steel

*Please add the **suffixes** below according to the material/surface required.

Order code suffixes			
Material	Suffix surface and material	Example	Standard sealing material (no additonal. suffix needed)
Steel, zinc plated, chrome[6]-free	CF	TEE16SROMDCF	NBR
Steel, zinc yellow plated	A3C	TEE16SROMDA3C	NBR
Stainless Steel	71	TEE16SRBOMD71	VIT

TEE-UNF Adjustable locknut branch tee

EO 24° cone end / Adjustable UN/UNF thread – O-ring (ISO 11926)

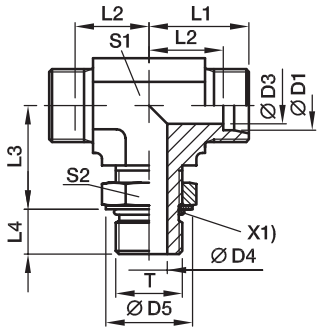

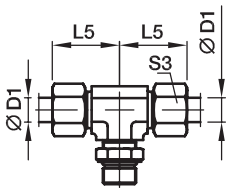

X1) O-ring OR

Series	D1	T	D3	D4	D5	L1	L2	L3	L4	L5	S1	S2	S3	Weight g/1 piece	Order code*	PN (bar)[1]) CF	PN (bar)[1]) A3C
L[3])	06	7/16-20 UNF-2A	4	4.5	16.5	21	14	19	10	29	14	14	14	58	**TEE06L7/16UNFOMD**	315	315
	08	7/16-20 UNF-2A	6	4.5	18.3	23	16	19	10	31	14	14	17	60	**TEE08L7/16UNFOMD**	315	315
	10	9/16-18 UNF-2A	8	7.5	20.2	24	17	24	10	32	19	17	19	102	**TEE10L9/16UNFOMD**	315	315
	12	9/16-18 UNF-2A	10	7.5	25.7	26	19	25	11	34	19	17	22	103	**TEE12L9/16UNFOMD**	315	315
	12	3/4-16 UNF-2A	10	10.0	25.7	26	19	25	13	34	19	22	22	118	**TEE12L3/4UNFOMD**	315	315
	15	3/4-16 UNF-2A	12	10.0	25.7	28	21	28	13	36	22	22	27	164	**TEE15L3/4UNFOMD**	315	315
	15	7/8-14 UNF-2A	12	12.5	29.3	28	21	28	15	36	22	27	27	182	**TEE15L7/8UNFOMD**	315	315
	18	7/8-14 UNF-2A	15	12.5	29.3	31	24	32	15	40	27	27	32	265	**TEE18L7/8UNFOMD**	315	315
	18	1 1/16-12 UN-2A	15	15.5	29.3	31	24	32	17	40	30	32	32	348	**TEE18L11/16UNOMD**	315	315
	22	1 1/16-12 UN-2A	19	15.5	36.7	35	28	35	17	44	30	32	36	354	**TEE22L11/16UNOMD**	160	160
	28	1 5/16-12 UN-2A	24	21.5	44.0	38	31	42	17	47	36	41	41	625	**TEE28L15/16UNOMD**	160	160
	35	1 5/8-12 UN-2A	30	27.5	55.0	48	38	46	17	59	50	50	50	1245	**TEE35L15/8UNOMD**	160	160
	42	1 7/8-12 UN-2A	36	33.5	55.0	49	38	47	17	61	50	55	60	1538	**TEE42L17/8UNOMD**	160	160
S[4])	06	7/16-20 UNF-2A	4	4.5	16.5	22	15	20	12	30	14	14	17	69	**TEE06S7/16UNFOMD**	400	400
	08	9/16-18 UNF-2A	5	7.5	18.3	24	17	25	12	32	19	17	19	116	**TEE08S9/16UNFOMD**	400	400
	10	9/16-18 UNF-2A	7	7.5	20.2	25	18	26	12	34	19	17	22	120	**TEE10S9/16UNFOMD**	400	400
	12	3/4-16 UNF-2A	8	10.0	25.7	29	22	30	14	38	22	22	24	195	**TEE12S3/4UNFOMD**	400	400
	16	7/8-14 UNF-2A	12	12.5	29.3	33	25	34	16	43	27	27	30	294	**TEE16S7/8UNFOMD**	400	400
	20	1 1/16-12 UN-2A	16	15.5	36.7	38	28	37	19	49	30	32	36	441	**TEE20S11/16UNOMD**	400	400
	25	1 1/16-12 UN-2A	20	15.5	44.0	42	30	50	19	54	36	32	46	628	**TEE25S11/16UNOMD**	400	400
	30	1 5/8-12 UN-2A	25	27.5	55.0	49	36	50	19	62	50	50	50	1276	**TEE30S15/8UNOMD**	250	250
	38	1 7/8-12 UN-2A	32	33.5	55.0	50	34	51	19	65	50	55	60	1256	**TEE38S17/8UNOMD**	250	250

[1]) Pressure shown = item deliverable

[3]) L = light series; [4]) S = heavy series

$\frac{\text{PN (bar)}}{10}$ = PN (MPa)

Delivery without nut and ring. Information on ordering complete fittings or alternative sealing materials see page I7.

*Please add the **suffixes** below according to the material/surface required.

Order code suffixes			
Material	Suffix surface and material	Example	Standard sealing material (no additonal. suffix needed)
Steel, zinc plated, chrome[6]-free	CF	TEE16S7/8UNFOMDCF	NBR
Steel, zinc yellow plated	A3C	TEE16S7/8UNFOMDA3C	NBR

LEE-OR Adjustable locknut run tee

EO 24° cone end / Adjustable metric thread – O-ring (ISO 6149)

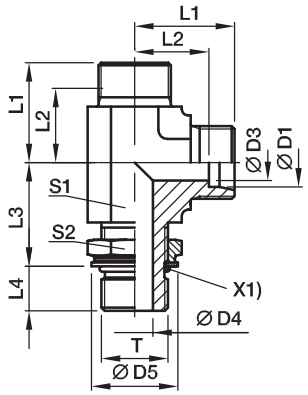

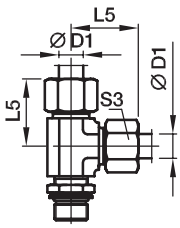

X1) O-ring OR

Series	D1	T	D3	D4	D5	L1	L2	L3	L4	L5	S1	S2	S3	Weight g/1 piece	Order code*	PN (bar)[1] CF	PN (bar)[1] A3C
L[3])	06	M10×1	4	4.5	15	21	14	20	7	29	14	14	14	52	**LEE06LMOROMD**	315	315
	08	M12×1.5	6	6.0	18	23	16	22	10	31	14	17	17	64	**LEE08LMOROMD**	315	315
	10	M14×1.5	8	7.5	20	24	17	25	10	32	19	19	19	100	**LEE10LMOROMD**	315	315
	12	M16×1.5	10	9.0	23	26	19	26	10	34	19	22	22	111	**LEE12LMOROMD**	315	315
	15	M18×1.5	12	11.0	25	28	21	30	11	36	22	24	27	166	**LEE15LMOROMD**	315	315
	18	M22×1.5	15	14.0	28	31	24	33	12	40	27	27	32	251	**LEE18LMOROMD**	315	315
	22	M27×2	19	18.0	33	35	28	35	14	44	30	32	36	334	**LEE22LM27X2OROMD**	160	160
	28	M33×2	24	23.0	41	38	31	38	14	47	36	41	41	458	**LEE28LMOROMD**	160	160
	35	M42×2	30	30.0	51	48	38	48	14	59	50	50	50	1127	**LEE35LMOROMD**	160	160
	42	M48×2	36	36.0	56	49	38	49	16	61	50	55	60	941	**LEE42LMOROMD**	160	160
S[4])	06	M12×1.5	4	4.0	18	22	15	22	10	30	14	17	17	72	**LEE06SMOROMD**	400	400
	08	M14×1.5	5	6.0	20	24	17	26	10	32	19	19	19	117	**LEE08SMOROMD**	400	400
	10	M16×1.5	7	7.0	23	25	18	27	11	34	19	22	22	128	**LEE10SMOROMD**	400	400
	12	M18×1.5	8	9.0	25	29	22	31	12	38	22	24	24	184	**LEE12SMOROMD**	400	400
	16	M22×1.5	12	12.0	28	33	25	35	14	43	27	27	30	300	**LEE16SMOROMD**	400	400
	20	M27×2	16	15.0	33	38	28	35	16	49	30	32	36	433	**LEE20SMOROMD**	400	400
	25	M33×2	20	20.0	41	42	30	44	16	54	36	41	46	644	**LEE25SMOROMD**	315	315
	30	M42×2	25	26.0	51	49	36	51	17	62	50	50	50	1347	**LEE30SMOROMD**	250	250
	38	M48×2	32	32.0	56	50	34	54	19	65	50	55	60	1317	**LEE38SMOROMD**	200	200

[1]) Pressure shown = item deliverable

[3]) L = light series; [4]) S = heavy series

$\frac{\text{PN (bar)}}{10}$ = PN (MPa)

Delivery without nut and ring. Information on ordering complete fittings or alternative sealing materials see page I7.

*Please add the **suffixes** below according to the material/surface required.

Order code suffixes			
Material	Suffix surface and material	Example	Standard sealing material (no additonal. suffix needed)
Steel, zinc plated, chrome[6]-free	CF	LEE16SMOROMDCF	NBR
Steel, zinc yellow plated	A3C	LEE16SMOROMDA3C	NBR

LEE-M Adjustable locknut run tee

EO 24° cone end / Adjustable metric thread – O-ring + retaining ring

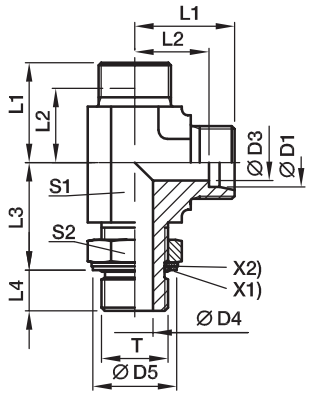

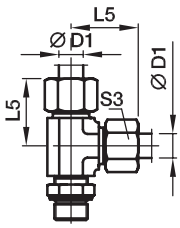

X1) O-ring OR
X2) retaining ring

Series	D1	T	D3	D4	D5	L1	L2	L3	L4	L5	S1	S2	S3	Weight g/1 piece	Order code*	PN (bar)[1] CF	A3C	71
L[3])	06	M10×1	4	4.5	15	21	14	20	7	29	14	13	14	52	**LEE06LMOMD**	315	315	315
	08	M12×1.5	6	6.0	18	23	16	22	10	31	14	17	17	65	**LEE08LMOMD**	315	315	315
	10	M14×1.5	8	7.5	20	24	17	25	9	32	19	17	19	98	**LEE10LMOMD**	315	315	315
	12	M16×1.5	10	9.0	23	26	19	26	9	34	19	19	22	107	**LEE12LMOMD**	315	315	315
	15	M18×1.5	12	11.0	25	28	21	30	11	36	22	22	27	165	**LEE15LMOMD**	315	315	315
	18	M22×1.5	15	14.0	28	31	24	33	11	40	27	27	32	254	**LEE18LMOMD**	250	250	250
	22	M27×2	19	18.0	33	35	28	35	14	44	30	32	36	338	**LEE22LM27X2OMD**	160	160	160
	28	M33×2	24	23.0	41	38	31	38	14	47	36	38	41	454	**LEE28LMOMD**	160	160	160
	35	M42×2	30	30.0	51	48	38	48	14	59	50	50	50	1139	**LEE35LMOMD**	160	160	160
	42	M48×2	36	36.0	56	49	38	49	16	61	50	55	60	1011	**LEE42LMOMD**	160	160	160
S[4])	06	M12×1.5	4	4.0	18	22	15	22	10	30	14	17	17	72	**LEE06SMOMD**	315	315	315
	08	M14×1.5	5	6.0	20	24	17	26	10	32	19	17	19	114	**LEE08SMOMD**	315	315	315
	10	M16×1.5	7	7.0	23	25	18	27	11	34	19	19	22	122	**LEE10SMOMD**	315	315	315
	12	M18×1.5	8	9.0	25	29	22	31	12	38	22	22	24	176	**LEE12SMOMD**	315	315	315
	16	M22×1.5	12	12.0	28	33	25	35	14	43	27	27	30	297	**LEE16SMOMD**	250	250	250
	20	M27×2	16	15.0	33	38	28	39	16	49	30	32	36	428	**LEE20SMOMD**	250	250	250
	25	M33×2	20	20.0	41	42	30	44	16	54	36	38	46	621	**LEE25SMOMD**	160	160	160
	30	M42×2	25	26.0	51	49	36	51	17	62	50	50	50	1335	**LEE30SMOMD**	160	160	160
	38	M48×2	32	32.0	56	50	34	54	19	65	50	55	60	1293	**LEE38SMOMD**	160	160	160

[1]) Pressure shown = item deliverable

[3]) L = light series; [4]) S = heavy series

$\frac{\text{PN (bar)}}{10}$ = PN (MPa)

Delivery without nut and ring. Information on ordering complete fittings or alternative sealing materials see page I7.

*Please add the **suffixes** below according to the material/surface required.

Order code suffixes			
Material	Suffix surface and material	Example	Standard sealing material (no additonal. suffix needed)
Steel, zinc plated, chrome[6]-free	CF	LEE16SMOMDCF	NBR
Steel, zinc yellow plated	A3C	LEE16SMOMDA3C	NBR
Stainless Steel	71	LEE16SMOMD71	VIT

LEE-R Adjustable locknut run tee

EO 24° cone end / Adjustable BSPP thread – O-ring + retaining ring (ISO 1179)
for ports with small or wide spot face;
differences in D5 in Stainless Steel are only for ports with wide spot face
(e. g. LEE16SRBOMD71)

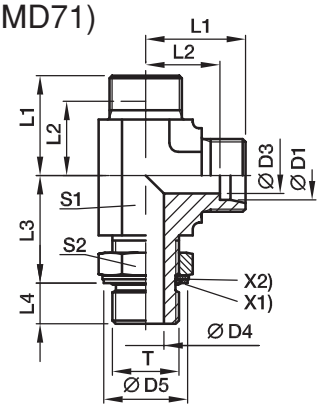

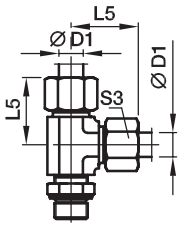

X1) O-ring OR
X2) retaining ring

Series	D1	T	D3	D4	D5[5])	D5[6])	L1	L2	L3	L4	L5	S1	S2	S3	Weight g/1 piece	Order code*	PN (bar)[1]) CF	A3C	71
L[3])	06	G 1/8A	4	4.5	15	15.0	21	14	19	7	29	14	14	14	53	**LEE06LROMD**	315	315	315
	08	G 1/4A	6	7.5	20	20.0	23	16	23	9	31	14	19	17	68	**LEE08LROMD**	315	315	315
	10	G 1/4A	8	7.5	20	20.0	24	17	25	9	32	19	19	19	98	**LEE10LROMD**	315	315	315
	12	G 3/8A	10	10.0	23	23.5	26	19	28	9	34	19	22	22	114	**LEE12LROMD**	250	250	250
	15	G 1/2A	12	12.5	28	28.5	28	21	30	13	36	22	27	27	183	**LEE15LROMD**	250	250	250
	18	G 1/2A	15	12.5	28	28.5	31	24	36	13	40	27	27	32	271	**LEE18LROMD**	250	250	250
	22	G 3/4A	19	15.5	33	34.5	35	28	36	13	44	30	36	36	367	**LEE22LROMD**	160	160	160
	28	G 1A	24	21.5	41	43.5	38	31	44	15	47	36	41	41	525	**LEE28LROMD**	160	160	160
	35	G 1 1/4A	30	27.5	51	52.5	48	38	50	15	59	50	50	50	1194	**LEE35LROMD**	160	160	160
	42	G 1 1/2A	36	33.0	56	60.0	49	38	52	15	61	50	55	60	1090	**LEE42LROMD**	160	160	160
S[4])	06	G 1/4A	4	7.5	20	20.0	22	15	23	9	30	14	19	17	71	**LEE06SROMD**	315	315	315
	08	G 1/4A	5	7.5	20	20.0	24	17	27	9	32	19	19	19	113	**LEE08SROMD**	315	315	315
	10	G 3/8A	7	10.0	23	23.5	25	18	29	9	34	19	22	22	124	**LEE10SROMD**	250	250	250
	12	G 3/8A	8	10.0	23	23.5	29	22	29	9	38	22	22	24	167	**LEE12SROMD**	250	250	250
	16	G 1/2A	12	12.5	28	28.5	33	25	36	13	43	27	27	30	295	**LEE16SROMD**	250	250	250
	20	G 3/4A	16	15.5	33	34.5	38	28	39	12	49	30	36	36	440	**LEE20SROMD**	250	250	250
	25	G 1A	20	21.5	41	43.5	42	30	44	14	54	36	41	46	629	**LEE25SROMD**	250	250	250
	30	G 1 1/4A	25	27.5	51	52.5	49	36	49	15	62	50	50	50	1285	**LEE30SROMD**	160	160	160
	38	G 1 1/2A	32	33.0	56	60.0	50	34	55	15	65	50	55	60	1272	**LEE38SROMD**	160	160	160

[1]) Pressure shown = item deliverable

[3]) L = light series; [4]) S = heavy series

$\frac{\text{PN (bar)}}{10}$ = PN (MPa)

Delivery without nut and ring. Information on ordering complete fittings or alternative sealing materials see page I7.

[5]) Steel; [6]) Stainless Steel

*Please add the **suffixes** below according to the material/surface required.

Order code suffixes			
Material	Suffix surface and material	Example	Standard sealing material (no additonal. suffix needed)
Steel, zinc plated, chrome[6]-free	CF	LEE16SROMDCF	NBR
Steel, zinc yellow plated	A3C	LEE16SROMDA3C	NBR
Stainless Steel	71	LEE16SRBOMD71	VIT

LEE-UNF Adjustable locknut run tee

EO 24° cone end / Adjustable UN/UNF thread – O-Ring (ISO 11926)

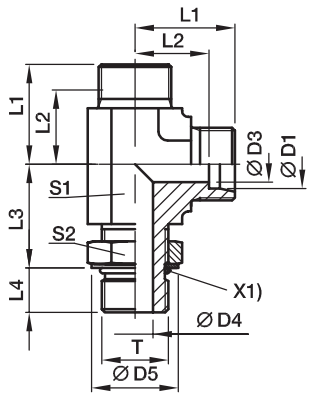

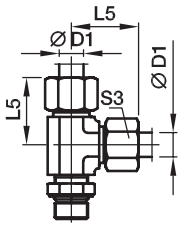

X1) O-ring OR

Series	D1	T	D3	D4	D5	L1	L2	L3	L4	L5	S1	S2	S3	Weight g/1 piece	Order code*	PN (bar)[1] CF	PN (bar)[1] A3C
L[3]	06	7/16-20 UNF-2A	4	4.5	16.5	21	14	19	10	29	14	14	14	57	**LEE06L7/16UNFOMD**	315	315
	08	7/16-20 UNF-2A	6	4.5	18.3	23	16	19	10	31	14	14	17	61	**LEE08L7/16UNFOMD**	315	315
	10	9/16-18 UNF-2A	8	7.5	20.2	24	17	24	10	32	19	17	19	101	**LEE10L9/16UNFOMD**	315	315
	12	9/16-18 UNF-2A	10	7.5	25.7	26	19	25	11	34	19	17	22	106	**LEE12L9/16UNFOMD**	315	315
	12	3/4-16 UNF-2A	10	10.0	25.7	26	19	25	13	34	19	22	22	122	**LEE12L3/4UNFOMD**	315	315
	15	3/4-16 UNF-2A	12	10.0	25.7	28	21	28	13	36	22	22	27	166	**LEE15L3/4UNFOMD**	315	315
	15	7/8-14 UNF-2A	12	12.5	29.3	28	21	28	15	36	22	27	27	183	**LEE15L7/8UNFOMD**	315	315
	18	7/8-14 UNF-2A	15	12.5	29.3	31	24	32	15	40	27	27	32	263	**LEE18L7/8UNFOMD**	315	315
	18	1 1/16-12 UN-2A	15	15.5	29.3	31	24	32	17	40	30	32	32	335	**LEE18L11/16UNOMD**	315	315
	22	1 1/16-12 UN-2A	19	15.5	36.7	35	28	35	17	44	30	32	36	355	**LEE22L11/16UNOMD**	160	160
	28	1 5/16-12 UN-2A	24	21.5	44.0	38	31	42	17	47	36	41	41	625	**LEE28L15/16UNOMD**	160	160
	35	1 5/8-12 UN-2A	30	27.5	55.0	48	38	46	17	59	50	50	50	1245	**LEE35L15/8UNOMD**	160	160
	42	1 7/8-12 UN-2A	36	33.5	55.0	49	38	47	17	61	50	55	60	1538	**LEE42L17/8UNOMD**	160	160
S[4]	06	7/16-20 UNF-2A	4	4.5	16.5	22	15	20	12	30	14	14	17	66	**LEE06S7/16UNFOMD**	400	400
	08	9/16-18 UNF-2A	5	7.5	18.3	24	17	25	12	32	19	17	19	114	**LEE08S9/16UNFOMD**	400	400
	10	9/16-18 UNF-2A	7	7.5	20.2	25	18	26	12	34	19	17	22	118	**LEE10S9/16UNFOMD**	400	400
	12	3/4-16 UNF-2A	8	10.0	25.7	29	22	30	14	38	22	22	24	185	**LEE12S3/4UNFOMD**	400	400
	16	7/8-14 UNF-2A	12	12.5	29.3	33	25	34	16	43	27	27	30	291	**LEE16S7/8UNFOMD**	400	400
	20	1 1/16-12 UN-2A	16	15.5	36.7	38	28	37	19	49	30	32	36	453	**LEE20S11/16UNOMD**	400	400
	25	1 1/16-12 UN-2A	20	15.5	44.0	42	30	50	19	54	36	32	46	589	**LEE25S11/16UNOMD**	400	400
	30	1 5/8-12 UN-2A	25	27.5	55.0	49	36	50	19	62	50	50	50	1276	**LEE30S15/8UNOMD**	250	250
	38	1 7/8-12 UN-2A	32	33.5	55.0	50	34	51	19	65	50	55	60	1256	**LEE38S17/8 UNOMD**	250	250

[1]) Pressure shown = item deliverable

[3]) L = light series; [4]) S = heavy series

$$\frac{\text{PN (bar)}}{10} = \text{PN (MPa)}$$

Delivery without nut and ring. Information on ordering complete fittings or alternative sealing materials see page I7.

Order code suffixes			
Material	Suffix surface and material	Example	Standard sealing material (no additonal. suffix needed)
Steel, zinc plated, chrome[6]-free	CF	LEE16S7/8UNFOMDCF	NBR
Steel, zinc yellow plated	A3C	LEE16S7/8UNFOMDA3C	NBR

*Please add the **suffixes** below according to the material/surface required.

TH-M-KDS High pressure banjo tee

EO 24° cone end / Male metric thread with soft seal ring

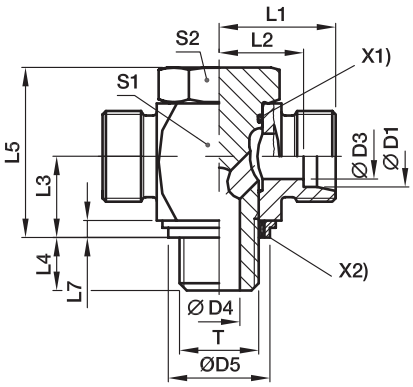

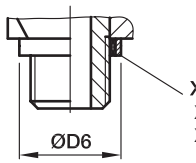

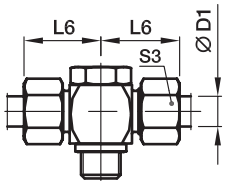

X1) O-ring OR
X2) Sealing ring KDS (for ports with small spot face, ISO 9974)
X3) Sealing ring KD (for ports with wide spot face, ISO 9974)

Series	D1	T	D3	D4	D5 KDS	D6 KD	L1	L2	L3	L4	L5	L6	L7	S1	S2	S3	Weight g/1 piece	Order code*	PN (bar)[1] CF	A3C	71
L[3])	06	M10×1	4	4.5	14.9	17.0	19.0	12.0	10.5	8	24.0	27	2.5	17	17	14	59	**TH06LMKDSOMD**	315	315	315
	08	M12×1.5	6	6.0	17.0	22.0	21.5	14.5	14.0	12	30.0	29	3.0	22	19	17	104	**TH08LMKDSOMD**	315	315	315
	10	M14×1.5	8	6.0	18.9	22.5	22.5	15.5	14.0	12	30.0	30	3.0	22	19	19	112	**TH10LMKDSOMD**	315	315	315
	12	M16×1.5	10	7.5	21.9	27.0	25.0	18.0	16.5	12	36.0	33	3.0	27	24	22	192	**TH12LMKDSOMD**	315	315	315
	15	M18×1.5	11	9.0	23.9	29.0	27.5	21.5	18.5	12	39.5	37	3.0	30	30	27	258	**TH15LMKDSOMD**	315	315	315
	18	M22×1.5	15	12.0	26.9	32.0	28.5	21.0	21.5	14	45.0	37	4.5	32	30	32	337	**TH18LMKDSOMD**	315	315	315
	22	M26×1.5	19	17.0	31.9	41.0	35.0	27.5	24.0	16	53.0	44	3.5	41	36	36	589	**TH22LMKDSOMD**	160	160	160
	28	M33×2	24	21.0	39.9	46.0	39.5	32.0	30.5	18	66.0	49	3.5	50	46	41	1072	**TH28LMKDSOMD**	160	160	160
	35	M42×2	30	27.0	49.9	57.0	46.5	36.0	35.5	20	76.0	58	3.5	60	55	50	1778	**TH35LMKDSOMD**	160	160	160
	42	M48×2	36	34.0	55.9	64.0	51.5	40.5	40.5	22	87.0	63	3.5	70	60	60	2566	**TH42LMKDSOMD**	160	160	160
S[4])	06	M12×1.5	4	6.0	17.0	22.0	23.5	16.5	14.0	12	30.0	31	3.0	22	19	17	112	**TH06SMKDSOMD**	400	400	400
	08	M14×1.5	5	6.0	18.9	22.5	23.5	16.5	14.0	12	30.0	31	3.0	22	19	19	123	**TH08SMKDSOMD**	400	400	400
	10	M16×1.5	7	7.5	21.9	27.0	26.0	18.5	16.5	12	36.0	35	3.0	27	24	22	200	**TH10SMKDSOMD**	400	400	400
	12	M18×1.5	8	9.0	23.9	29.0	27.5	20.0	18.5	12	39.5	36	3.0	27	27	24	261	**TH12SMKDSOMD**	400	400	400
	14	M20×1.5	10	10.0		32.0	30.5	22.5	20.0	14	43.5	40	3.0	32	30	27	334	**TH14SMKDOMD**			400
	16	M22×1.5	12	12.0	26.9	32.0	30.5	22.0	21.5	14	45.0	40	4.5	32	30	30	351	**TH16SMKDSOMD**	315	315	315
	20	M27×2	16	16.0	32.9	41.0	37.0	26.5	24.0	16	53.0	48	3.5	41	36	36	629	**TH20SMKDSOMD**	315	315	315
	25	M33×2	20	21.0	39.9	46.0	43.5	31.5	30.5	18	66.0	56	3.5	50	46	46	1106	**TH25SMKDSOMD**	250	250	250
	30	M42×2	25	27.0	49.9	57.0	50.5	37.0	35.5	20	76.0	64	3.5	60	55	50	1843	**TH30SMKDSOMD**	160	160	160
	38	M48×2	32	34.0	55.9	64.0	57.5	41.5	40.5	22	87.0	72	3.5	70	60	60	2744	**TH38SMKDSOMD**	160	160	160

[1]) Pressure shown = item deliverable

[3]) L = light series; [4]) S = heavy series

$\frac{\text{PN (bar)}}{10}$ = PN (MPa)

Delivery without nut and ring. Information on ordering complete fittings or alternative sealing materials see page I7.

*Please add the **suffixes** below according to the material/surface required.

Order code suffixes			
Material	Suffix surface and material	Example	Standard sealing material (no additonal. suffix needed)
Steel, zinc plated, chrome[6]-free	CF	TH16SMKDSOMDCF	NBR
Steel, zinc yellow plated	A3C	TH16SMKDSOMDA3C	NBR
Stainless Steel	71	TH16SMKDOMD71	VIT/PTFE

Stainless Steel only with sealing ring KD available!
Replace KDS by KD in the order code.

TH-M High pressure banjo tee

EO 24° cone end / Male metric thread with metal sealing ring

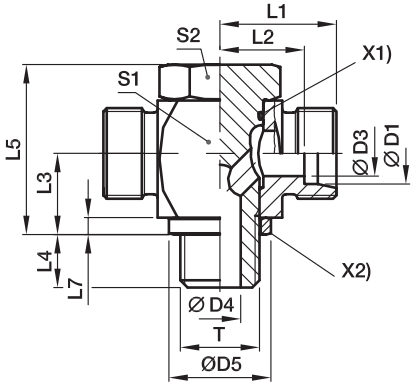

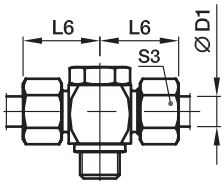

X1) O-ring OR
X2) Sealing ring DKA

Series	D1	T	D3	D4	D5	L1	L2	L3	L4	L5	L6	L7	S1	S2	S3	Weight g/1 piece	Order code*	PN (bar)[1] CF	A3C	71
L[3])	06	M10×1	4	4.5	14	19.0	12.0	10.5	8	24.0	27	2.5	17	17	14	58	**TH06LMOMD**	250	250	250
	08	M12×1.5	6	6.0	17	21.5	14.5	14.0	12	30.0	29	3.0	22	19	17	104	**TH08LMOMD**	250	250	250
	10	M14×1.5	8	6.0	19	22.5	15.5	14.0	12	30.0	30	3.0	22	19	19	112	**TH10LMOMD**	250	250	250
	12	M16×1.5	10	7.5	21	25.0	18.0	16.5	12	36.0	33	3.0	27	24	22	191	**TH12LMOMD**	250	250	250
	15	M18×1.5	11	9.0	23	27.5	21.5	18.5	12	39.5	37	3.0	30	30	27	258	**TH15LMOMD**	250	250	250
	18	M22×1.5	15	12.0	27	28.5	21.0	21.5	14	45.0	37	4.5	32	30	32	337	**TH18LMOMD**	250	250	250
	22	M26×1.5	19	17.0	31	35.0	27.5	24.0	16	53.0	44	3.5	41	36	36	590	**TH22LMOMD**	160	160	160
	28	M33×2	24	21.0	39	39.5	32.0	30.5	18	66.0	49	3.5	50	46	41	1072	**TH28LMOMD**	160	160	160
	35	M42×2	30	27.0	49	46.5	36.0	35.5	20	76.0	58	3.5	60	55	50	1778	**TH35LMOMD**	160	160	160
	42	M48×2	36	34.0	55	51.5	40.5	40.5	22	87.0	63	3.5	70	60	60	2565	**TH42LMOMD**	160	160	160
S[4])	06	M12×1.5	4	6.0	17	23.5	16.5	14.0	12	30.0	31	3.0	22	19	17	112	**TH06SMOMD**	315	315	315
	08	M14×1.5	5	6.0	19	23.5	16.5	14.0	12	30.0	31	3.0	22	19	19	124	**TH08SMOMD**	315	315	315
	10	M16×1.5	7	7.5	21	26.0	18.5	16.5	12	36.0	35	3.0	27	24	22	200	**TH10SMOMD**	315	315	315
	12	M18×1.5	8	9.0	23	27.5	20.0	18.5	12	39.5	36	3.0	27	27	24	261	**TH12SMOMD**	315	315	315
	14	M20×1.5	10	10.0	25	30.5	22.5	20.0	14	43.5	40	3.0	32	30	27	334	**TH14SMOMD**	315	315	315
	16	M22×1.5	12	12.0	27	30.5	22.0	21.5	14	45.0	40	4.5	32	30	30	350	**TH16SMOMD**	315	315	315
	20	M27×2	16	16.0	32	37.0	26.5	24.0	16	53.0	48	3.5	41	36	36	628	**TH20SMOMD**	160	160	160
	25	M33×2	20	21.0	39	43.5	31.5	30.5	18	66.0	56	3.5	50	46	46	1106	**TH25SMOMD**	160	160	
	30	M42×2	25	27.0	49	50.5	37.0	35.5	20	76.0	64	3.5	60	55	50	1843	**TH30SMOMD**	160	160	160
	38	M48×2	32	34.0	55	57.5	41.5	40.5	22	87.0	72	3.5	70	60	60	2741	**TH38SMOMD**	160	160	160

[1]) Pressure shown = item deliverable

[3]) L = light series; [4]) S = heavy series

$\frac{\text{PN (bar)}}{10}$ = PN (MPa)

Delivery without nut and ring. Information on ordering complete fittings or alternative sealing materials see page I7.

*Please add the **suffixes** below according to the material/surface required.

Order code suffixes			
Material	Suffix surface and material	Example	Standard sealing material (no additonal. suffix needed)
Steel, zinc plated, chrome[6]-free	CF	TH16SMOMDCF	NBR
Steel, zinc yellow plated	A3C	TH16SMOMDA3C	NBR
Stainless Steel	71	TH16SMOMD71	VIT

TH-R-KDS High pressure banjo tee

EO 24° cone end / Male BSPP thread with soft seal ring

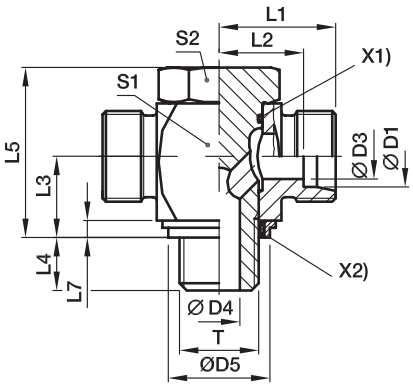

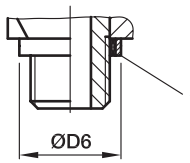

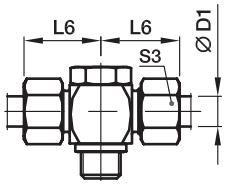

X1) O-ring OR
X2) Sealing ring KDS (for ports with small spot face, ISO 1179)
X3) Sealing ring KD (for ports with wide spot face, ISO 1179)

Series	D1	T	D3	D4	D5 KDS	D6 KD	L1	L2	L3	L4	L5	L6	L7	S1	S2	S3	Weight g/1 piece	Order code*	PN (bar)[1] CF	A3C	71
L[3])	06	G 1/8 A	4	4.5	14.9	17	19.0	12.0	10.5	8	24	27	2.5	17	17	14	58	**TH06LRKDSOMD**	315	315	315
	08	G 1/4 A	6	6.0	18.9	22	21.5	14.5	14.0	12	30	29	3.0	22	19	17	108	**TH08LRKDSOMD**	315	315	315
	10	G 1/4 A	8	6.0	18.9	22	22.5	15.5	14.0	12	30	30	3.0	22	19	19	110	**TH10LRKDSOMD**	315	315	315
	12	G 3/8 A	10	7.5	21.9	27	25.0	18.0	16.5	12	36	33	3.0	27	24	22	193	**TH12LRKDSOMD**	315	315	315
	15	G 1/2 A	12	11.0	26.9	32	28.5	21.5	21.5	14	45	37	4.5	32	30	27	321	**TH15LRKDSOMD**	315	315	315
	18	G 1/2 A	15	11.0	26.9	32	28.5	21.0	21.5	14	45	37	4.5	32	30	32	329	**TH18LRKDSOMD**	315	315	315
	22	G 3/4 A	19	17.0	32.9	41	35.0	27.5	24.0	16	53	44	3.5	41	36	36	585	**TH22LRKDSOMD**	160	160	160
	28	G 1 A	24	21.0	39.9	46	39.5	32.0	30.5	18	66	49	3.5	50	46	41	1090	**TH28LRKDSOMD**	160	160	160
	35	G 1 1/4 A	30	27.0	49.9	57	46.5	36.0	35.5	20	76	58	3.5	60	55	50	1765	**TH35LRKDSOMD**	160	160	160
	42	G 1 1/2 A	36	34.0	55.9	64	51.5	40.5	40.5	22	87	63	3.5	70	60	60	2545	**TH42LRKDSOMD**	160	160	160
S[4])	06	G 1/4 A	4	6.0	18.9	22	23.5	16.5	14.0	12	30	31	3.0	22	19	17	116	**TH06SRKDSOMD**	400	400	400
	08	G 1/4 A	5	6.0	18.9	22	23.5	16.5	14.0	12	30	31	3.0	22	19	19	121	**TH08SRKDSOMD**	400	400	400
	10	G 3/8 A	7	7.5	21.9	27	26.0	18.5	16.5	12	36	35	3.0	27	24	22	201	**TH10SRKDSOMD**	400	400	400
	12	G 3/8 A	8	7.5	21.9	27	26.0	18.5	16.5	12	36	35	3.0	27	24	24	207	**TH12SRKDSOMD**	400	400	400
	14	G 1/2 A	10	11.0	26.9	32	30.5	22.5	21.5	15	45	40	4.5	32	30	27	338	**TH14SRKDSOMD**	400	400	400
	16	G 1/2 A	12	11.0	26.9	32	30.5	22.0	21.5	14	45	40	4.5	32	30	30	350	**TH16SRKDSOMD**	315	315	315
	20	G 3/4 A	16	17.0	32.9	41	37.0	26.5	24.0	16	53	48	3.5	41	36	36	620	**TH20SRKDSOMD**	315	315	315
	25	G 1 A	20	21.0	39.9	46	43.5	31.5	30.5	18	66	56	3.5	50	46	46	1124	**TH25SRKDSOMD**	250	250	250
	30	G 1 1/4 A	25	27.0	49.9	57	50.5	37.0	35.5	20	76	64	3.5	60	55	50	1830	**TH30SRKDSOMD**	160	160	160
	38	G 1 1/2 A	32	34.0	55.9	64	57.5	41.5	40.5	22	87	72	3.5	70	60	60	2721	**TH38SRKDSOMD**	160	160	160

[1]) Pressure shown = item deliverable

[3]) L = light series; [4]) S = heavy series

$\frac{\text{PN (bar)}}{10}$ = PN (MPa)

Delivery without nut and ring. Information on ordering complete fittings or alternative sealing materials see page I7.

*Please add the **suffixes** below according to the material/surface required.

Order code suffixes			
Material	Suffix surface and material	Example	Standard sealing material (no additonal. suffix needed)
Steel, zinc plated, chrome[6]-free	CF	TH16SRKDSOMDCF	NBR
Steel, zinc yellow plated	A3C	TH16SRKDSOMDA3C	NBR
Stainless Steel	71	TH16SRKDOMD71	VIT/PTFE

Stainless Steel only with sealing ring KD available!
Replace KDS by KD in the order code.

TH-R High pressure banjo tee

EO 24° cone end / Male BSPP thread with metal sealing ring

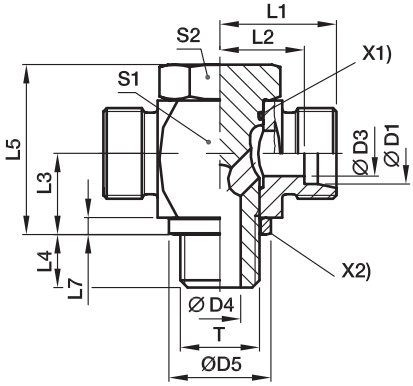

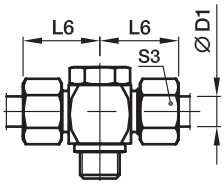

X1) O-ring OR
X2) Sealing ring DKA

Series	D1	T	D3	D4	D5	L1	L2	L3	L4	L5	L6	L7	S1	S2	S3	Weight g/1 piece	Order code*	PN (bar)[1] CF	A3C	71
L[3])	06	G 1/8 A	4	4.5	14	19.0	12.0	10.5	8	24	27	2.5	17	17	14	58	**TH06LROMD**	250	250	250
	08	G 1/4 A	6	6.0	18	21.5	14.5	14.0	12	30	29	3.0	22	19	17	108	**TH08LROMD**	250	250	250
	10	G 1/4 A	8	6.0	18	22.5	15.5	14.0	12	30	30	3.0	22	19	19	110	**TH10LROMD**	250	250	250
	12	G 3/8 A	10	7.5	22	25.0	18.0	16.5	12	36	33	3.0	27	24	22	193	**TH12LROMD**	250	250	250
	15	G 1/2 A	12	11.0	26	28.5	21.5	21.5	14	45	37	4.5	32	30	27	321	**TH15LROMD**	250	250	250
	18	G 1/2 A	15	11.0	26	28.5	21.0	21.5	14	45	37	4.5	32	30	32	329	**TH18LROMD**	250	250	250
	22	G 3/4 A	19	17.0	32	35.0	27.5	24.0	16	53	44	3.5	41	36	36	584	**TH22LROMD**	160	160	160
	28	G 1 A	24	21.0	39	39.5	32.0	30.5	18	66	49	3.5	50	46	41	1090	**TH28LROMD**	160	160	160
	35	G 1 1/4 A	30	27.0	57	46.5	36.0	35.5	20	76	58	3.5	60	55	50	1766	**TH35LROMD**	160	160	160
	42	G 1 1/2 A	36	34.0	55	51.5	40.5	40.5	22	87	63	3.5	70	60	60	2544	**TH42LROMD**	160	160	160
S[4])	06	G 1/4 A	4	6.0	18	23.5	16.5	14.0	12	30	31	3.0	22	19	17	116	**TH06SROMD**	315	315	315
	08	G 1/4 A	5	6.0	18	23.5	16.5	14.0	12	30	31	3.0	22	19	19	121	**TH08SROMD**	315	315	315
	10	G 3/8 A	7	7.5	22	26.0	18.5	16.5	12	36	35	3.0	27	24	22	201	**TH10SROMD**	315	315	315
	12	G 3/8 A	8	7.5	22	26.0	18.5	16.5	12	36	35	3.0	27	24	24	207	**TH12SROMD**	315	315	315
	14	G 1/2 A	10	11.0	26	30.5	22.5	21.5	14	45	40	4.5	32	30	27	343	**TH14SROMD**	315	315	315
	16	G 1/2 A	12	11.0	26	30.5	22.0	21.5	14	45	40	4.5	32	30	30	350	**TH16SROMD**	315	315	315
	20	G 3/4 A	16	17.0	32	37.0	26.5	24.0	16	53	48	3.5	41	36	36	618	**TH20SROMD**	160	160	160
	25	G 1 A	20	21.0	39	43.5	31.5	30.5	18	66	56	3.5	50	46	46	1124	**TH25SROMD**	160	160	160
	30	G 1 1/4 A	25	27.0	49	50.5	37.0	35.5	20	76	64	3.5	60	55	50	1831	**TH30SROMD**	160	160	160
	38	G 1 1/2 A	32	34.0	55	57.5	41.5	40.5	22	87	72	3.5	70	60	60	2720	**TH38SROMD**	160	160	160

[1]) Pressure shown = item deliverable

[3]) L = light series; [4]) S = heavy series

$\frac{\text{PN (bar)}}{10}$ = PN (MPa)

Delivery without nut and ring. Information on ordering complete fittings or alternative sealing materials see page I7.

*Please add the **suffixes** below according to the material/surface required.

Order code suffixes			
Material	Suffix surface and material	Example	Standard sealing material (no additonal. suffix needed)
Steel, zinc plated, chrome[6]-free	CF	TH16SROMDCF	NBR
Steel, zinc yellow plated	A3C	TH16SROMDA3C	NBR
Stainless Steel	71	TH16SROMD71	VIT

SWVE-M Banjo elbow

EO 24° cone end / Male metric thread

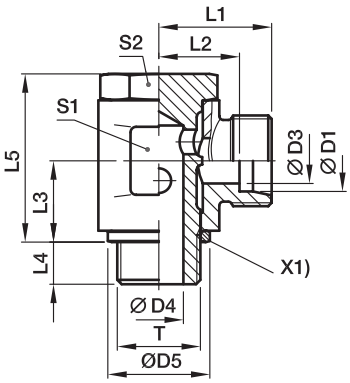

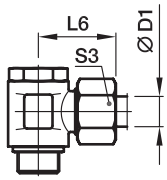

X1) Sealing ring DKA

Series	D1	T	D3	D4	D5	L1	L2	L3	L4	L5	L6	S1	S2	S3	Weight g/1 piece	Order code*	PN (bar)[1] CF	PN (bar)[1] A3C
LL[2])	04	M08×1	3.0	3.0	12.5	14.5	10.5	8.0	6	17.0	20	12	12	10	18	**SWVE04LLMOMD**	63	63
	06	M10×1	4.5	5.0	14.0	15.5	10.0	10.0	6	21.0	22	14	14	12	29	**SWVE06LLMOMD**	63	63
	08	M10×1	6.0	5.0	14.0	16.5	11.0	10.0	6	21.0	23	14	14	14	31	**SWVE08LLMOMD**	63	63
L[3])	06	M10×1	4.5	5.0	14.0	15.5	10.5	10.0	6	21.5	25	14	14	14	31	**SWVE06LMOMD**	160	160
	08	M12×1.5	6.0	6.0	17.0	19.0	12.0	12.0	9	25.0	27	17	17	17	51	**SWVE08LMOMD**	160	160
	10	M14×1.5	8.0	6.5	19.0	21.0	14.0	13.0	9	27.0	29	19	19	19	68	**SWVE10LMOMD**	160	160
	12	M16×1.5	10.0	8.5	21.0	22.5	15.5	15.0	9	32.0	30	22	21	22	100	**SWVE12LMOMD**	100	100
	15	M18×1.5	12.0	11.0	23.0	24.5	17.5	18.0	9	37.5	33	24	24	27	138	**SWVE15LMOMD**	100	100
	18	M22×1.5	15.0	13.0	27.0	28.0	20.5	21.5	11	44.0	37	30	27	32	241	**SWVE18LMOMD**	100	100
	22	M26×1.5	19.0	18.0	31.0	33.0	25.5	24.0	13	49.0	42	36	32	36	351	**SWVE22LMOMD**	100	100
S[4])	06	M12×1.5	4.0	6.0	17.0	21.0	14.0	12.0	9	25.0	29	17	17	17	55	**SWVE06SMOMD**	160	160
	08	M14×1.5	5.0	6.5	19.0	22.0	15.0	13.0	9	27.0	30	19	19	19	75	**SWVE08SMOMD**	160	160
	10	M16×1.5	7.0	8.5	21.0	23.5	16.0	15.0	9	32.0	32	22	22	22	106	**SWVE10SMOMD**	100	100
	12	M18×1.5	8.0	11.0	23.0	24.5	17.0	18.0	9	37.0	33	24	24	24	134	**SWVE12SMOMD**	100	100
	14	M20×1.5	10.0	10.0	25.0	28.0	20.0	18.0	11	37.0	38	27	27	27	179	**SWVE14SMOMD**	100	100
	16	M22×1.5	12.0	13.0	27.0	30.0	21.5	21.5	11	44.0	40	30	27	30	252	**SWVE16SMOMD**	100	100
	20	M27×2	16.0	18.0	32.0	35.0	24.5	24.0	13	49.0	46	36	32	36	363	**SWVE20SMOMD**	100	100

[1]) Pressure shown = item deliverable

[2]) LL = very light series; [3]) L = light series; [4]) S = heavy series

$$\frac{\text{PN (bar)}}{10} = \text{PN (MPa)}$$

Delivery without nut and ring. Information on ordering complete fittings see page I7.

*Please add the **suffixes** below according to the material/surface required.

Order code suffixes			
Material	Suffix surface and material	Example	Standard sealing material (no additonal. suffix needed)
Steel, zinc plated, chrome[6]-free	CF	SWVE16SMOMDCF	NBR
Steel, zinc yellow plated	A3C	SWVE16SMOMDA3C	NBR

SWVE-R Banjo elbow

EO 24° cone end / Male BSPP thread

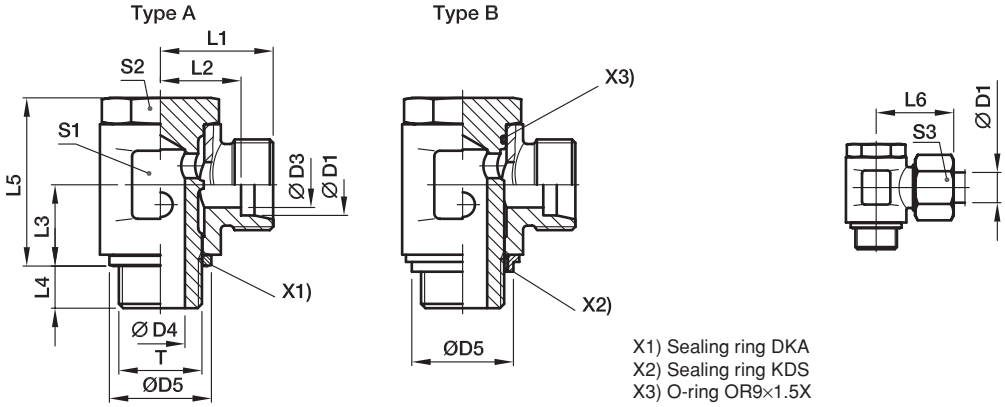

X1) Sealing ring DKA
X2) Sealing ring KDS
X3) O-ring OR9×1.5X

Series	D1	Type	T	D3	D4	D5	L1	L2	L3	L4	L5	L6	S1	S2	S3	Weight g/1 piece	Order code*	PN (bar)[1]) CF	PN (bar)[1]) A3C
LL[2])	04	B	G 1/8A	3.0	5.0	15	15.5	11.5	10.0	6	21.5	21	14	14	10	29	**SWVE04LLRKDSOMD**	250	250
	06	B	G 1/8A	4.5	5.0	15	15.5	10.0	10.0	6	21.5	22	14	14	12	30	**SWVE06LLRKDSOMD**	250	250
LL[2])	04	A	G 1/8A	3.0	5.0	14	15.5	11.5	10.0	6	21.0	21	14	14	10	28	**SWVE04LLROMD**	63	63
	06	A	G 1/8A	4.5	5.0	14	15.5	10.0	10.0	6	21.5	22	14	14	12	28	**SWVE06LLROMD**	63	63
	08	A	G 1/8A	6.0	5.0	14	16.5	11.0	10.0	6	21.0	23	14	14	14	30	**SWVE08LLROMD**	63	63
L[3])	06	A	G 1/8A	4.0	5.0	14	17.5	10.5	10.0	6	21.0	25	14	14	14	31	**SWVE06LROMD**	160	160
	08	A	G 1/4A	6.0	6.5	18	20.0	13.0	13.0	9	27.0	28	19	19	17	65	**SWVE08LROMD**	160	160
	10	A	G 1/4A	8.0	6.5	18	21.0	14.0	13.0	9	27.0	29	19	19	19	66	**SWVE10LROMD**	160	160
	12	A	G 3/8A	10.0	8.5	22	22.5	15.5	15.0	9	32.0	30	22	22	22	102	**SWVE12LROMD**	100	100
	15	A	G 1/2A	12.0	11.0	26	26.0	19.0	18.0	11	37.5	34	27	27	27	171	**SWVE15LROMD**	100	100
	18	A	G 1/2A	15.0	12.0	26	28.0	20.5	21.5	11	44.0	37	30	27	32	249	**SWVE18LROMD**	100	100
	22	A	G 3/4A	19.0	18.0	32	33.0	25.5	24.0	13	49.0	42	36	32	36	349	**SWVE22LROMD**	100	100
S[4])	06	A	G 1/4A	4.0	6.5	18	22.0	15.0	13.0	9	27.0	30	19	19	17	69	**SWVE06SROMD**	160	160
	08	A	G 1/4A	5.0	6.5	18	22.0	15.0	13.0	9	27.0	30	19	19	19	73	**SWVE08SROMD**	160	160
	10	A	G 3/8A	7.0	8.5	22	23.5	16.0	15.0	9	32.0	32	22	22	22	108	**SWVE10SROMD**	100	100
	12	A	G 3/8A	8.0	8.0	22	24.5	17.0	18.0	9	37.0	33	24	24	24	147	**SWVE12SROMD**	100	100
	14	A	G 1/2A	10.0	11.0	26	28.0	20.0	18.0	11	37.0	38	27	27	27	177	**SWVE14SROMD**	100	100
	16	A	G 1/2A	12.0	12.0	26	30.0	21.5	21.5	11	44.0	40	30	27	30	249	**SWVE16SROMD**	100	100
	20	A	G 3/4A	16.0	18.0	32	35.0	24.5	24.0	13	49.0	46	36	32	36	359	**SWVE20SROMD**	100	100

[1]) Pressure shown = item deliverable

[2]) LL = very light series; [3]) L = light series; [4]) S = heavy series

$\frac{\text{PN (bar)}}{10}$ = PN (MPa)

Delivery without nut and ring. Information on ordering complete fittings or alternative sealing materials see page I7.

*Please add the **suffixes** below according to the material/surface required.

Order code suffixes			
Material	Suffix surface and material	Example	Standard sealing material (no additonal. suffix needed)
Steel, zinc plated, chrome[6]-free	CF	SWVE16SROMDCF	
Steel, zinc yellow plated	A3C	SWVE16SROMDA3C	
Steel, zinc plated, chrome[6]-free	CF	SWVE06LLRKDSOMDCF	NBR
Steel, zinc yellow plated	A3C	SWVE06LLRKDSOMDA3C	NBR

TE-M Male stud branch tee

EO 24° cone end / Male metric thread – metal sealing edge (ISO 9974)

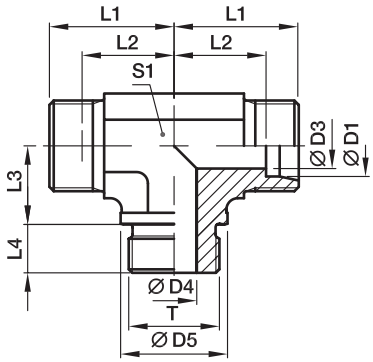

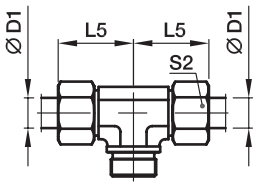

Series	D1	T	D3	D4	D5	L1	L2	L3	L4	L5	S1	S2	Weight g/1 piece	Order code*	PN (bar)[1]) CF	A3C	71
L[3])	22	M26×1.5	19	18	31	35	27.5	26	16	44	27	36	208	**TE22LM**	160	160	160
	28	M33×2	24	23	39	38	30.5	30	18	47	36	41	352	**TE28LM**	160	160	160
	35	M42×2	30	30	49	45	34.5	34	20	56	41	50	554	**TE35LM**	160	160	160
	42	M48×2	36	36	55	51	40.0	39	22	63	50	60	847	**TE42LM**	160	160	160
S[4])	20	M27×2	16	16	32	37	26.5	26	16	48	27	36	265	**TE20SM**	400	400	400
	25	M33×2	20	20	39	42	30.0	30	18	54	36	46	482	**TE25SM**	250	250	250
	30	M42×2	25	25	49	49	35.5	34	20	62	41	50	772	**TE30SM**	160	160	160
	38	M48×2	32	32	55	57	41.0	39	22	72	50	60	1121	**TE38SM**	160	160	160

[1]) Pressure shown = item deliverable

[3]) L = light series; [4]) S = heavy series

$\frac{\text{PN (bar)}}{10}$ = PN (MPa)

Delivery without nut and ring. Information on ordering complete fittings see page I7.

*Please add the **suffixes** below according to the material/surface required.

Order code suffixes		
Material	Suffix surface and material	Example
Steel, zinc plated, chrome[6]-free	CFX	TE20SMCFX
Steel, zinc yellow plated	A3CX	TE20SMA3CX
Stainless Steel	71X	TE20SM71X

TE-R Male stud branch tee

EO 24° cone end / Male BSPP thread – metal sealing edge (ISO 1179)

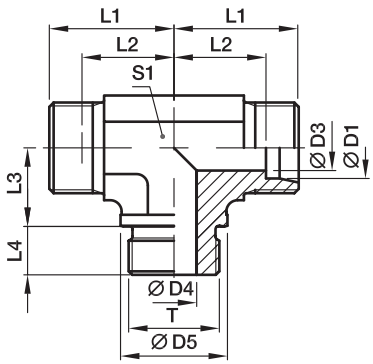

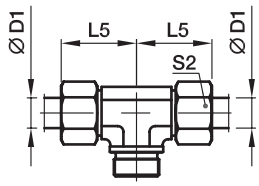

Series	D1	T	D3	D4	D5	L1	L2	L3	L4	L5	S1	S2	Weight g/1 piece	Order code*	PN (bar)[1] CF	A3C	71	MS
L[3])	22	G3/4A	19	18	32	35	27.5	26	16	44	27	36	208	**TE22LR**	160	160	160	100
	28	G1A	24	23	39	38	30.5	30	18	47	36	41	378	**TE28LR**	160	160	160	100
	35	G11/4A	30	30	49	45	34.5	34	20	56	41	50	554	**TE35LR**	160	160	160	100
	42	G11/2A	36	36	55	51	40.0	39	22	63	50	60	847	**TE42LR**	160	160	160	100
S[4])	20	G3/4 A	16	16	32	37	26.5	26	16	48	27	36	267	**TE20SR**	400	400	400	250
	25	G1A	20	20	39	42	30.0	30	18	54	36	46	485	**TE25SR**	250	250	250	
	30	G1 1/4 A	25	25	49	49	35.5	34	20	62	41	50	762	**TE30SR**	160	160	160	
	38	G1 1/2 A	32	32	55	57	41.0	39	22	72	50	60	1121	**TE38SR**	160	160	160	

[1]) Pressure shown = item deliverable

[3]) L = light series; [4]) S = heavy series

$\frac{\text{PN (bar)}}{10}$ = PN (MPa)

Delivery without nut and ring. Information on ordering complete fittings see page I7.

*Please add the **suffixes** below according to the material/surface required.

Order code suffixes		
Material	Suffix surface and material	Example
Steel, zinc plated, chrome[6]-free	CFX	TE20SRCFX
Steel, zinc yellow plated	A3CX	TE20SRA3CX
Stainless Steel	71X	TE20SR71X
Brass	MSX	TE20SRMSX

TE-R (KEG) Male stud branch tee

EO 24° cone end / Male short BSP taper thread (DIN 3852-2, type C)

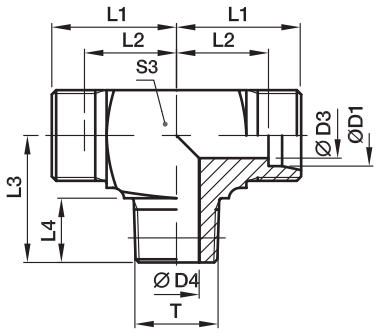

Profile body steel and brass (S3)
Series LL 4–8 mm D1
Series L 6+8 mm D1
Series S 6 mm D1

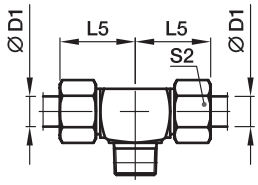

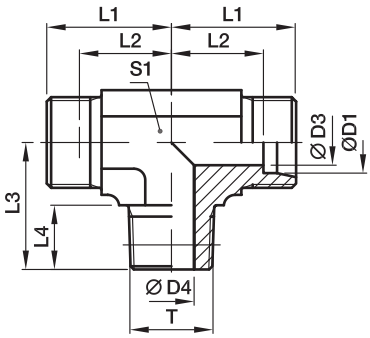

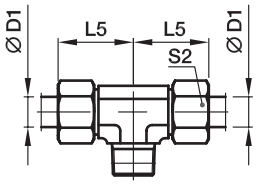

Series	D1	T	D3	D4	L1	L2	L3	L4	L5	S1	S2	S3	Weight g/1 piece	Order code*	PN (bar)[1]) CF	A3C	71	MS
LL[2])	04	R1/8keg.	3.0	4.0	15	11.0	17	8	21	9	10	11	21	**TE04LLR**	100	100	100	63
	06	R1/8keg.	4.5	4.5	15	9.5	17	8	21	9	12	11	21	**TE06LLR**	100	100	100	63
	08	R1/8keg.	6.0	6.0	17	11.5	20	8	23	12	14	12	29	**TE08LLR**	100	100	100	63
L[3])	06	R1/8keg.	4.0	4.0	19	12.0	20	8	27	12	14	12	38	**TE06LR**	315	315	315	200
	08	R1/4keg.	6.0	6.0	21	14.0	26	12	29	12	17	14	58	**TE08LR**	315	315	315	200
	10	R1/4keg.	8.0	7.0	22	15.0	27	12	30	14	19		43	**TE10LR**	315	315	315	200
	12	R3/8keg.	10.0	9.0	24	17.0	28	12	32	17	22		61	**TE12LR**	315	315	315	200
	15	R1/2keg.	12.0	11.0	28	21.0	34	14	36	19	27		113	**TE15LR**	315	315	315	200
	18	R1/2keg.	15.0	14.0	31	23.5	36	14	40	24	32		149	**TE18LR**	315	315	315	200
S[4])	06	R1/4keg.	4.0	4.0	23	16.0	26	12	31	12	17	14	73	**TE06SR**	400	400	400	250
	08	R1/4keg.	5.0	5.0	24	17.0	27	12	32	14	19		61	**TE08SR**	400	400	400	250
	10	R3/8keg.	7.0	7.0	25	17.5	28	12	34	17	22		82	**TE10SR**	400	400	400	250
	12	R3/8keg.	8.0	8.0	29	21.5	28	12	38	17	24		105	**TE12SR**	400	400	400	250
	14	R1/2keg.	10.0	10.0	30	22.0	32	14	40	19	27		134	**TE14SR**	400	400	400	250
	16	R1/2keg.	12.0	12.0	33	24.5	32	14	43	24	30		175	**TE16SR**	400	400	400	250

[1]) Pressure shown = item deliverable

[2]) LL = very light series; [3]) L = light series; [4]) S = heavy series

$\frac{\text{PN (bar)}}{10}$ = PN (MPa)

Delivery without nut and ring. Information on ordering complete fittings see page I7.

Order code suffixes		
Material	Suffix surface and material	Example
Steel, zinc plated, chrome[6]-free	CFX	TE16SRCFX
Steel, zinc yellow plated	A3CX	TE16SRA3CX
Stainless Steel	71X	TE16SR71X
Brass	MSX	TE16SRMSX

*Please add the **suffixes** below according to the material/surface required.

TE-M(KEG) Male stud branch tee

EO 24° cone end / Male short metric taper thread (DIN 3852-1, type C)

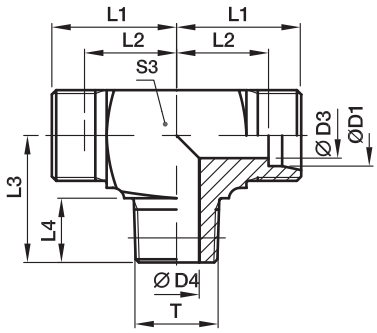

Profile body steel and brass (S3)
Series LL 4–8 mm D1
Series L 6+8 mm D1
Series S 6 mm D1

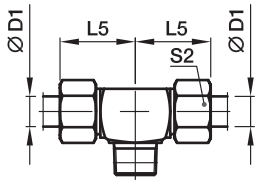

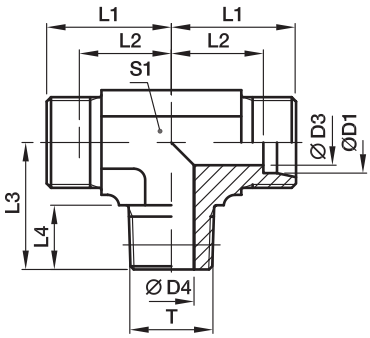

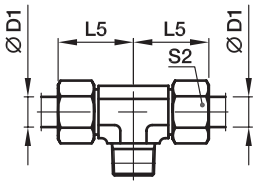

Series	D1	T	D3	D4	L1	L2	L3	L4	L5	S1	S2	S3	Weight g/1 piece	Order code*	PN (bar)[1] CF	A3C	71
LL[2])	04	M8×1tap.	3.0	3.5	15	11.0	17	8	21	9	10	9	17	**TE04LLM**	100	100	100
	06	M10×1tap.	4.5	4.5	15	9.5	17	8	21	9	12	11	20	**TE06LLM**	100	100	100
	08	M10×1tap.	6.0	6.0	17	11.5	20	8	23	12	14	12	29	**TE08LLM**	100	100	100
L[3])	06	M10×1tap.	4.0	4.0	19	12.0	20	8	27	12	14	12	38	**TE06LM**	315	315	315
	08	M12×1.5tap.	6.0	6.0	21	14.0	26	12	29	12	17	14	54	**TE08LM**	315	315	315
	10	M14×1.5tap.	8.0	7.0	22	15.0	27	12	30	14	19		45	**TE10LM**	315	315	315
	12	M16×1.5tap.	10.0	9.0	24	17.0	28	12	32	17	22		60	**TE12LM**	315	315	315
	15	M18×1.5tap.	12.0	11.0	28	21.0	32	12	36	19	27		100	**TE15LM**	315	315	315
	18	M22×1.5tap.	15.0	14.0	31	23.5	36	14	40	24	32		149	**TE18LM**	315	315	315
S[4])	06	M12×1.5tap.	4.0	4.0	23	16.0	26	12	31	12	17	14	69	**TE06SM**	400	400	400
	08	M14×1.5tap.	5.0	5.0	24	17.0	27	12	32	14	19		98	**TE08SM**	400	400	400
	10	M16×1.5tap.	7.0	7.0	25	17.5	28	12	34	17	22		82	**TE10SM**	400	400	400
	12	M18×1.5tap.	8.0	8.0	29	21.5	28	12	38	17	24		106	**TE12SM**	400	400	400
	14	M20×1.5tap.	10.0	10.0	30	22.0	32	14	40	19	27		126	**TE14SM**	400	400	400
	16	M22×1.5tap.	12.0	12.0	33	24.5	32	14	43	24	30		177	**TE16SM**	400	400	400

[1]) Pressure shown = item deliverable

[2]) LL = very light series; [3]) L = light series; [4]) S = heavy series

$$\frac{\text{PN (bar)}}{10} = \text{PN (MPa)}$$

Delivery without nut and ring. Information on ordering complete fittings see page I7.

*Please add the **suffixes** below according to the material/surface required.

Order code suffixes		
Material	Suffix surface and material	Example
Steel, zinc plated, chrome[6]-free	CFX	TE16SMCFX
Steel, zinc yellow plated	A3CX	TE16SMA3CX
Stainless Steel	71X	TE16SM71X

LE-M Male stud run tee

EO 24° cone end / Male metric thread – metal sealing edge (ISO 9974)

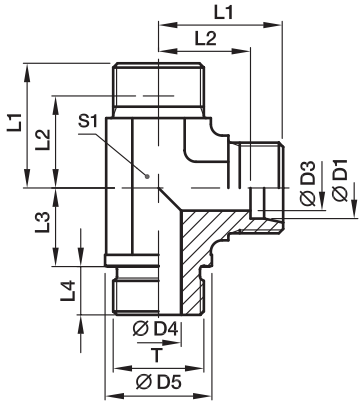

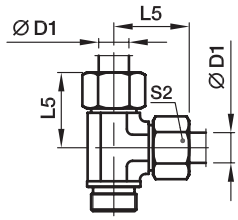

Series	D1	T	D3	D4	D5	L1	L2	L3	L4	L5	S1	S2	Weight g/1 piece	Order code*	PN (bar)[1] CF	A3C	71
L[3])	22	M26×1.5	19	18	31	35	27.5	26	16	44	27	36	225	**LE22LM**	160	160	160
	28	M33×2	24	23	39	38	30.5	30	18	47	36	41	382	**LE28LM**	160	160	160
	35	M42×2	30	30	49	45	34.5	34	20	56	41	50	583	**LE35LM**	160	160	160
	42	M48×2	36	36	55	51	40.0	39	22	63	50	60	821	**LE42LM**	160	160	160
S[4])	20	M27×2	16	16	32	37	26.5	26	16	48	27	36	264	**LE20SM**	400	400	400
	25	M33×2	20	20	39	42	30.0	30	18	54	36	46	497	**LE25SM**	250	250	250
	30	M42×2	25	25	49	49	35.5	34	20	62	41	50	744	**LE30SM**	160	160	160
	38	M48×2	32	32	55	57	41.0	39	22	72	50	60	1111	**LE38SM**	160	160	160

[1]) Pressure shown = item deliverable

[3]) L = light series; [4]) S = heavy series

$\frac{\text{PN (bar)}}{10}$ = PN (MPa)

Delivery without nut and ring. Information on ordering complete fittings see page I7.

*Please add the **suffixes** below according to the material/surface required.

Order code suffixes		
Material	Suffix surface and material	Example
Steel, zinc plated, chrome[6]-free	CFX	LE20SMCFX
Steel, zinc yellow plated	A3CX	LE20SMA3CX
Stainless Steel	71X	LE20SM71X

LE-R Male stud run tee

EO 24° cone end / Male BSPP thread – metal sealing edge (ISO 1179)

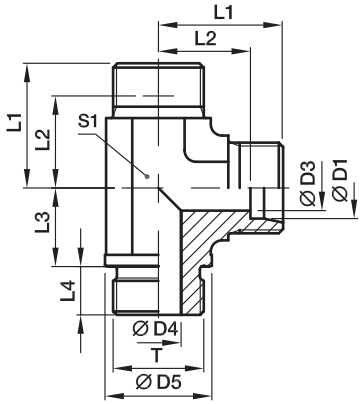

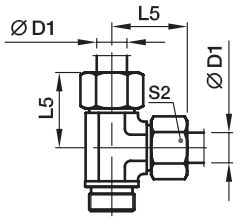

Series	D1	T	D3	D4	D5	L1	L2	L3	L4	L5	S1	S2	Weight g/1 piece	Order code*	PN (bar)[1]) CF	A3C	71
L[3])	22	G3/4A	19	18	32	35	27.5	26	16	44	27	36	225	**LE22LR**	160	160	160
	28	G1A	24	23	39	38	30.5	30	18	47	36	41	358	**LE28LR**	160	160	160
	35	G1 1/4A	30	30	49	45	34.5	34	20	56	41	50	583	**LE35LR**	160	160	160
	42	G1 1/2A	36	36	55	51	40.0	39	22	63	50	60	821	**LE42LR**	160	160	160
S[4])	20	G3/4A	16	16	32	37	26.5	26	16	48	27	36	259	**LE20SR**	400	400	400
	25	G1A	20	20	39	42	30.0	30	18	54	36	46	495	**LE25SR**	250	250	250
	30	G1 1/4A	25	25	49	49	35.5	34	20	62	41	50	744	**LE30SR**	160	160	160
	38	G1 1/2A	32	32	55	57	41.0	39	22	72	50	60	1111	**LE38SR**	160	160	160

[1]) Pressure shown = item deliverable

[3]) L = light series; [4]) S = heavy series

$\frac{\text{PN (bar)}}{10}$ = PN (MPa)

Delivery without nut and ring. Information on ordering complete fittings see page I7.

*Please add the **suffixes** below according to the material/surface required.

Order code suffixes		
Material	Suffix surface and material	Example
Steel, zinc plated, chrome[6]-free	CFX	LE20SRCFX
Steel, zinc yellow plated	A3CX	LE20SRA3CX
Stainless Steel	71X	LE20SR71X

LE-R (KEG) Male stud run tee

EO 24° cone end / Male short BSP taper thread (DIN 3852-2, type C)

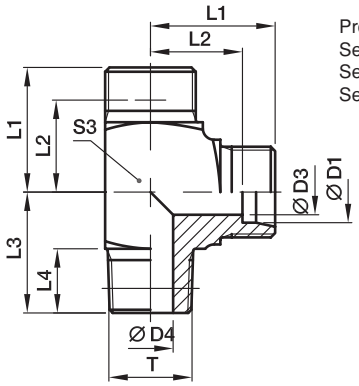

Profile body steel (S3)
Series LL 4–8 mm D1
Series L 6+8 mm D1
Series S 6 mm D1

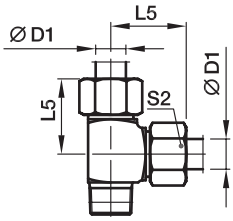

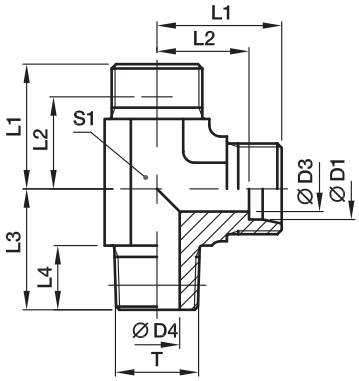

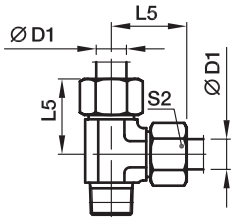

Series	D1	T	D3	D4	L1	L2	L3	L4	L5	S1	S2	S3	Weight g/1 piece	Order code*	PN (bar)[1]) CF	A3C	71
LL[2])	04	R1/8tap.	3.0	4.0	15	11.0	17	8	21	9	10	11	20	**LE04LLR**	100	100	100
	06	R1/8tap.	4.5	4.5	15	9.5	17	8	21	9	12	11	21	**LE06LLR**	100	100	100
	08	R1/8tap.	6.0	6.0	17	11.5	20	8	23	12	14	12	28	**LE08LLR**	100	100	100
L[3])	06	R1/8tap.	4.0	4.0	19	12.0	20	8	27	12	14	12	40	**LE06LR**	315	315	315
	08	R1/4tap.	6.0	6.0	21	14.0	26	12	29	12	17	14	57	**LE08LR**	315	315	315
	10	R1/4tap.	8.0	7.0	22	15.0	27	12	30	14	19		50	**LE10LR**	315	315	315
	12	R3/8tap.	10.0	9.0	24	17.0	28	12	32	17	22		60	**LE12LR**	315	315	315
	15	R1/2tap.	12.0	11.0	28	21.0	34	14	36	19	27		115	**LE15LR**	315	315	315
	18	R1/2tap.	15.0	14.0	31	23.5	36	14	40	24	32		145	**LE18LR**	315	315	315
S[4])	06	R1/4tap.	4.0	4.0	23	16.0	26	12	31	12	17	14	71	**LE06SR**	400	400	400
	08	R1/4tap.	5.0	5.0	24	17.0	27	12	32	14	19		62	**LE08SR**	400	400	400
	10	R3/8tap.	7.0	7.0	25	17.5	28	12	34	17	22		82	**LE10SR**	400	400	400
	12	R3/8tap.	8.0	8.0	29	21.5	28	12	38	17	24		102	**LE12SR**	400	400	400
	14	R1/2tap.	10.0	10.0	30	22.0	32	14	40	19	27		130	**LE14SR**	400	400	400
	16	R1/2tap.	12.0	12.0	33	24.5	32	14	43	24	30		193	**LE16SR**	400	400	400

[1]) Pressure shown = item deliverable

[2]) LL = very light series; [3]) L = light series; [4]) S = heavy series

$$\frac{\text{PN (bar)}}{10} = \text{PN (MPa)}$$

Delivery without nut and ring. Information on ordering complete fittings see page I7.

*Please add the **suffixes** below according to the material/surface required.

Order code suffixes		
Material	Suffix surface and material	Example
Steel, zinc plated, chrome[6]-free	CFX	LE16SRCFX
Steel, zinc yellow plated	A3CX	LE16SRA3CX
Stainless Steel	71X	LE16SR71X

LE-M(KEG) Male stud run tee

EO 24° cone end / Male short metric taper thread (DIN 3852-1, Form C)

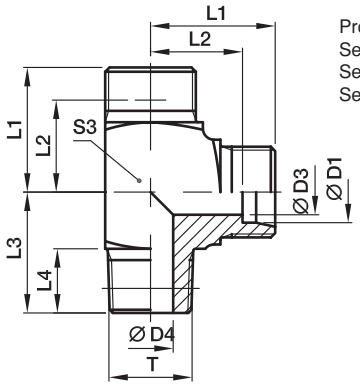

Profile body steel (S3)
Series LL 4–8 mm D1
Series L 6+8 mm D1
Series S 6 mm D1

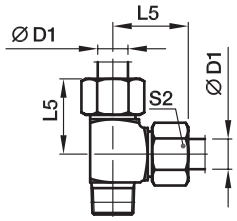

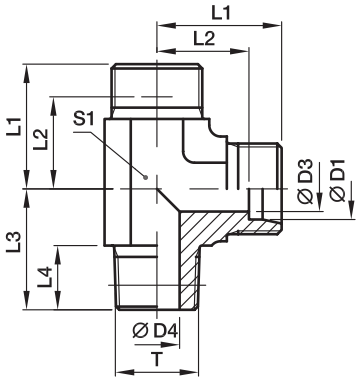

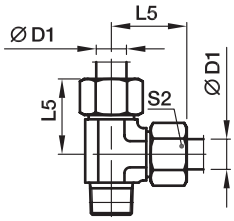

Series	D1	T	D3	D4	L1	L2	L3	L4	L5	S1	S2	S3	Weight g/1 piece	Order code*	PN (bar)[1]) CF	A3C	71
LL[2])	04	M8×1tap.	3.0	3.5	15	11.0	17	8	21	9	10	9	17	**LE04LLM**	100	100	100
	06	M10×1tap.	4.5	4.5	15	9.5	17	8	21	9	12	11	21	**LE06LLM**	100	100	100
	08	M10×1tap.	6.0	6.0	17	11.5	20	8	23	12	14	12	29	**LE08LLM**	100	100	100
L[3])	06	M10×1tap.	4.0	4.0	19	12.0	20	8	27	12	14	12	38	**LE06LM**	315	315	315
	08	M12×1.5tap.	6.0	6.0	21	14.0	26	12	29	12	17	14	56	**LE08LM**	315	315	315
	10	M14×1.5tap.	8.0	7.0	22	15.0	27	12	30	14	19		47	**LE10LM**	315	315	315
	12	M16×1.5tap.	10.0	9.0	24	17.0	28	12	32	17	22		58	**LE12LM**	315	315	315
	15	M18×1.5tap.	12.0	11.0	28	21.0	32	12	36	19	27		98	**LE15LM**	315	315	315
	18	M22×1.5tap.	15.0	14.0	31	23.5	36	14	40	24	32		156	**LE18LM**	315	315	315
S[4])	06	M12×1.5tap.	4.0	4.0	23	16.0	26	12	31	12	17	14	70	**LE06SM**	400	400	400
	08	M14×1.5tap.	5.0	5.0	24	17.0	27	12	32	14	19		66	**LE08SM**	400	400	400
	10	M16×1.5tap.	7.0	7.0	25	17.5	28	12	34	17	22		123	**LE10SM**	400	400	400
	12	M18×1.5tap.	8.0	8.0	29	21.5	28	12	38	17	24		169	**LE12SM**	400	400	400
	14	M20×1.5tap.	10.0	10.0	30	22.0	32	14	40	19	27		174	**LE14SM**	400	400	400
	16	M22×1.5tap.	12.0	12.0	33	24.5	32	14	43	24	30		178	**LE16SM**	400	400	400

[1]) Pressure shown = item deliverable

[2]) LL = very light series; [3]) L = light series; [4]) S = heavy series

$\frac{\text{PN (bar)}}{10}$ = PN (MPa)

Delivery without nut and ring. Information on ordering complete fittings see page I7.

*Please add the **suffixes** below according to the material/surface required.

Order code suffixes		
Material	Suffix surface and material	Example
Steel, zinc plated, chrome[6]-free	CFX	LE16SMCFX
Steel, zinc yellow plated	A3CX	LE16SMA3CX
Stainless Steel	71X	LE16SM71X